HYOSUNG

650 Ei D spec

SERVICE MANUAL

HYOSUNG

GV650 PRO D spec

GT650/P/S/REi D spec

SERVICE MANUAL

99000HB9510

FOREWORD

This manual contains an introductory description on HYOSUNG『 GV650 PRO D spec 』& 『 GT650i/P/S/R EI D spec 』 and procedures for its inspection / service and overhaul of its main components. It covers the differences from Carburetor type and please refer to the service manual of 『 Aquila 650 (99000-51210)』, 『 Comet 650 S & Comet 650 R (99000-94910)』 and 『 Comet 650 (99000-94810)』 for others which are not covered in this manual. Other information considered as generally known is not included.

Read GENERAL INFORMATION section to familiarize yourself with outline of the vehicle and MAINTENANCE and other sections to use as a guide for proper inspection and service.

This manual will help you know the vehicle better so that you can assure your customers of your optimum and quick service.

- **This manual has been prepared on the basis of the latest specification at the time of publication.**
  If modification has been made since then, difference may exist between the content of this manual and the actual vehicle.
- **Illustrations in this manual are used to show the basic principles of operation and work procedures.**
  They may not represent the actual vehicle exactly in detail.

⚠ WARNING

This manual is intended for those who have enough knowledge and skills for servicing HYOSUNG vehicles. Without such knowledge and skills, you should not attempt servicing by relying on this manual only.
Instead, please contact your nearby authorized HYOSUNG motorcycle dealer.

NOTE

- 『 GV650 PRO 』 *model : Aquila 650 PRO*
- 『 GT650i/P/S/R 』 *model : Comet 650/P/S/R*

GROUP INDEX

GENERAL INFORMATION	1
EI SYSTEM DIAGNOSIS	4-1
FUEL SYSTEM AND THROTTLE BODY	4-2
ELECTRICAL SYSTEM	6
CHASSIS	7
SERVICING INFORMATION	8

HYOSUNG

© COPYRIGHT S&T Motors Co., Ltd.

HOW TO USE THIS MANUAL

TO LOCATE WHAT YOU ARE LOOKING FOR :

1. The text of this manual is divided into sections.
2. As the title of these sections are listed on the previous page as GROUP INDEX, select the section where you are looking for.
3. Holding the manual as shown at the right will allow you to find the first page of the section easily.
4. On the first page of each section, its contents are listed. Find the item and page you need.

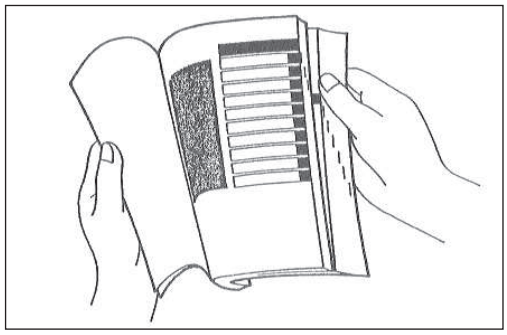

SYMBOL

Listed in the table below are the symbols indicating instructions and other information necessary for servicing. The meaning of each symbol is also included in the table.

SYMBOL	DEFINITION	SYMBOL	DEFINITION
	Torque control required. Data beside it indicates specified torque.	BF	Apply or use brake fluid.
OIL	Apply oil. Use engine oil unless otherwise specified.	V	Measure in voltage range.
G	Apply GREASE.	Ω	Measure in resistance range.
S	Apply SILICONE GREASE.	A	Measure in current range.
M	Apply MOLY PASTE.		Measure in diode test range.
GASKET	Apply GASKET BOND		Measure in continuity test range.
FORK	Use fork oil.	TOOL	Use special tool.
LOCK	Apply THREAD LOCK	L L C	Use engine coolant.

ABBREVIATIONS USED IN THIS MANUAL

A

ABDC	: After Bottom Dead Center
AC	: Alternating Current
API	: American Petroleum Institute
ATDC	: After Top Dead Center

B

BBDC	: Before Bottom Dead Center
BDC	: Bottom Dead Center
BTDC	: Before Top Dead Center

D

DC	: Direct Current
DOHC	: Double Over Head Camshaft

E

ECU	: Engine Control Unit, EI Control Unit
EI	: Electric fuel Injection, Electric fuel Injector

F

FP	: Fuel Pump

G

GP Switch	: Gear Position Switch

I

IAP Sensor	: Intake Air Pressure Sensor (IAPS)
IAT Sensor	: Intake Air Temperature Sensor (IATS)
IG	: Ignition
ISC Solenoid	: Idle Speed Control Solenoid

L

LCD	: Liquid Crystal Display
LED	: Light Emitting Diode
LH	: Left Hand

M

Max	: Maximum
Min	: Minimum

O

O_2 Sensor	: Oxygen Sensor (O_2S)

R

RH	: Right Hand
RO Switch	: Roll Over Switch

S

SAE	: Society of Automotive Engineers
S / W	: Switch

T

TDC	: Top Dead Center
TP Sensor	: Throttle Position Sensor (TPS)

W

WT Sensor	: Water Temperature Sensor (WTS)

NOTE

- ***NO.1 : For Front Cylinder***
- ***NO.2 : For Rear Cylinder***

WIRE COLOR

B	: Black	Gr	: Gray	Sb	: Light blue
L	: Blue	Lg	: Light green	W	: White
Br	: Brown	O	: Orange	Y	: Yellow
G	: Green	R	: Red		

BL	: Black with Blue tracer	BBr	: Black with Brown tracer
BG	: Black with Green tracer	BO	: Black with Orange tracer
BR	: Black with Red tracer	BW	: Black with White tracer
BY	: Black with Yellow tracer	LB	: Blue with Black tracer
LG	: Blue with Green tracer	LR	: Blue with Red tracer
LW	: Blue with White tracer	LY	: Blue with Yellow tracer
BrB	: Brown with Black tracer	BrW	: Brown with White tracer
GB	: Green with Black tracer	GR	: Green with Red tracer
GY	: Green with Yellow tracer	GrB	: Gray with Black tracer
GrR	: Gray with Red tracer	GrW	: Gray with White tracer
OB	: Orange with Black tracer	OL	: Orange with Blue tracer
OG	: Orange with Green tracer	OR	: Orange with Red tracer
OW	: Orange with White tracer	OY	: Orange with Yellow tracer
RB	: Red with Black tracer	RW	: Red with White tracer
WB	: White with Black tracer	WL	: White with Blue tracer
WR	: White with Red tracer	YB	: Yellow with Black tracer
YL	: Yellow with Blue tracer	YG	: Yellow with Green tracer
YR	: Yellow with Red tracer		

GENERAL INFORMATION

1

CONTENTS

EXTERIOR ILLUSTRATION & PHOTOGRAPH ..... 6 [1-7-1]

SPECIFICATIONS [GV650 PRO D spec] ..... 10 [1-8-1]

SPECIFICATIONS [GT650 Ei D spec & GT650 P Ei D spec] ..... 12 [1-9-1]

SPECIFICATIONS [GT650 S Ei D spec & GT650 R Ei D spec] ... 14 [1-9-3]

FUNCTION OF EI SENSOR ..... 16 [1-9-5]

EXTERIOR ILLUSTRATION & PHOTOGRAPH

GT650R EFi D spec

EXTERIOR ILLUSTRATION & PHOTOGRAPH

GT650 PEi D spec

EXTERIOR ILLUSTRATION & PHOTOGRAPH

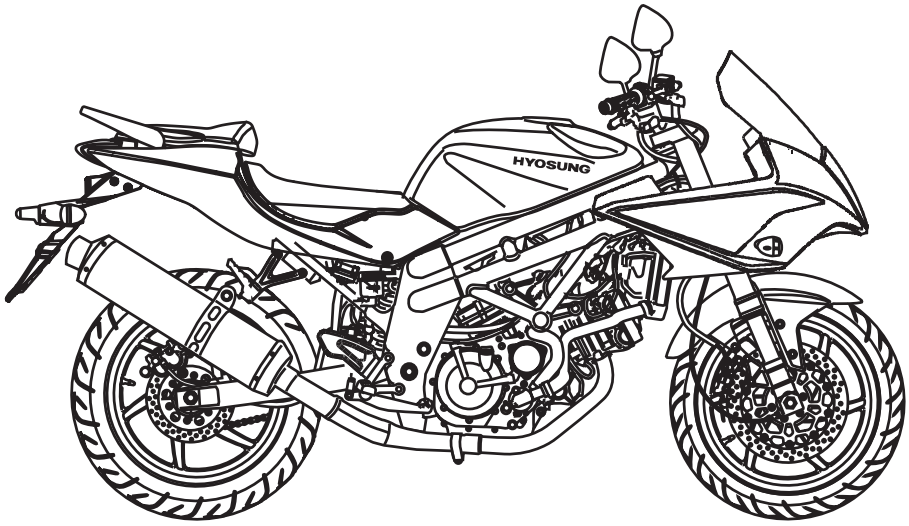

GT650 S Ei D spec

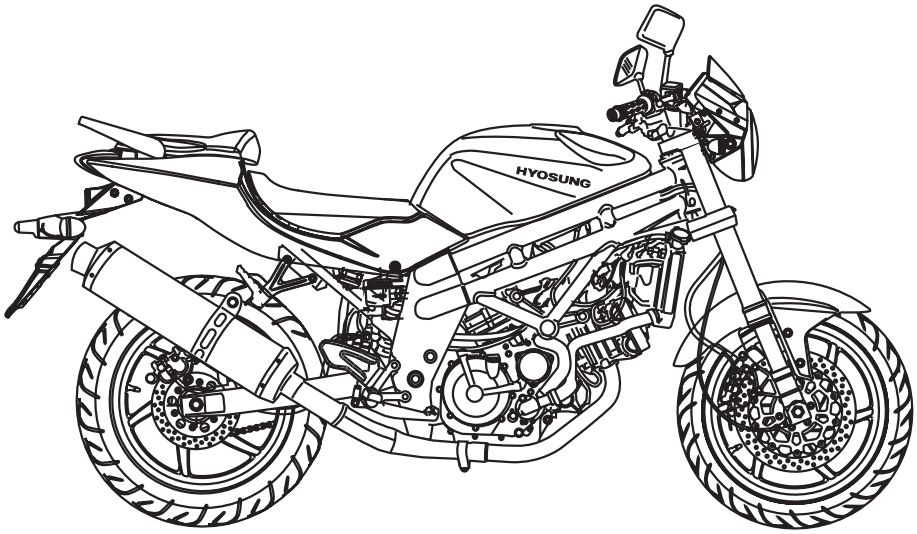

GT650 Ei D spec

EXTERIOR ILLUSTRATION & PHOTOGRAPH

GV650 PRO D spec

SPECIFICATIONS [GV650 PRO D spec]

⊙ DIMENSIONS AND MASS

ITEM	GV650 PRO D spec
Overall length	2,330 mm (91.7 in)
Overall width	840 mm (33.1 in)
Overall height	1,150 mm (45.3 in)
Wheelbase	1,670 mm (65.8 in)
Ground clearance	160 mm (6.3 in)
Mass	240 kg (529 lbs)

⊙ ENGINE

ITEM	GV650 PRO D spec
Type	Four-stroke, DOHC, Liquid-cooled
Number of cylinder	V-2 cylinder
Bore	81.5 mm (3.21 in)
Stroke	62.0 mm (2.44 in)
Piston displacement	647 ㎤ (39.5 in³)
Fuel system	Electric fuel Injection
Starter system	Electric starter
Lubrication system	Wet sump

⊙ TRANSMISSION

ITEM		GV650 PRO D spec
Clutch		Wet multi-plate type
Transmission		5-speed constant mesh
Gearshift pattern		1-down, 4-up
Final reduction		2.69
Gear ratio	1st	2.46
	2nd	1.78
	3rd	1.38
	4th	1.13
	5th	0.96
	6th	–
Drive belt		Poly chain belt

⊙ CHASSIS

ITEM	GV650 PRO D spec
Front suspension	Telescopic type
Rear suspension	Swingarm type
Steering angle	35 ° (right & left)
Caster	35 °
Trail	160 mm (6.3 in)
Front brake	Double disk brake
Rear brake	Disk brake
Front tire size	120/70 - ZR 18 59W
Rear tire size	180/55 - ZR 17 73W
Front fork stroke	130 mm (5.12 in)

⊙ ELECTRICAL

ITEM		GV650 PRO D spec
Ignition type		ECU
Ignition timing		5 ° B.T.D.C. at 2,000 rpm
Spark plug		CR8E
Battery		12 V 12 Ah (MF)
Fuse	Main	30 A
	ECU	15 A
Head lamp	HI	12 V - H4 : 60 / 55 W × 1
	LO	
	Position	12 V - W5 W × 1
Turn signal lamp		12 V - RY10 W × 4
Brake / Tail lamp		LED type
License plate lamp		12 V - W5 W × 1
Tachometer lamp		–
High beam indicator lamp		LED type
Turn signal indicator lamp(right & left)		LED type
Neutral indicator lamp		LED type
Fuel indicator lamp		LCD type (Level type)
Coolant temperature indicator lamp		LCD type (Level type)
“FI”(Fuel Injection) check lamp		LED type

⊙ CAPACITIES

ITEM		GV650 PRO D spec
Fuel tank		16.0 ℓ
Engine oil	Oil change	3,000 mℓ
	Oil and filter change	3,200 mℓ
	Engine overhaul	3,400 mℓ
Front fork oil capacity (One side)		420 cc

NOTE
The specifications are subject to change without notice.

SPECIFICATIONS [GT650Ei D spec & GT650PEi D spec]

⊙ DIMENSIONS AND MASS

ITEM	GT650Ei D spec	GT650PEi D spec
Overall length	2,090 mm (82.3 in)	←
Overall width	785 mm (30.9 in)	←
Overall height	1,125 mm (44.3 in)	1,095 mm (43.1 in)
Wheelbase	1,435 mm (56.5 in)	←
Ground clearance	175 mm (6.9 in)	←
Mass	210 kg (463 lbs)	←

⊙ ENGINE

ITEM	GT650Ei D spec	GT650PEi D spec
Type	Four-stroke, DOHC, Liquid-cooled	←
Number of cylinder	V-2 cylinder	←
Bore	81.5 mm (3.21 in)	←
Stroke	62.0 mm (2.44 in)	←
Piston displacement	647 cm^3 (39.5 in^3)	←
Fuel system	Electric fuel Injection	←
Starter system	Electric starter	←
Lubrication system	Wet sump	←

⊙ TRANSMISSION

ITEM		GT650Ei D spec	GT650PEi D spec
Clutch		Wet multi-plate type	←
Transmission		6-speed constant mesh	←
Gearshift pattern		1-down, 5-up	←
Final reduction		2.93	←
Gear ratio	1st	2.46	←
	2nd	1.60	←
	3rd	1.32	←
	4th	1.13	←
	5th	0.96	←
	6th	0.85	←
Drive chain		RK525XSO 108 links	←

⊙ CHASSIS

ITEM	GT650Ei D spec	GT650PEi D spec
Front suspension	Telescopic type	←
Rear suspension	Swingarm type	←
Steering angle	30 ° (right & left)	←
Caster	25.5 °	←
Trail	85 mm (3.35 in)	←
Front brake	Double disk brake	←
Rear brake	Disk brake	←
Front tire size	120/60 - ZR 17 55W	←
Rear tire size	160/60 - ZR 17 69W	←
Front fork stroke	120 mm (4.72 in)	←

⊙ ELECTRICAL

ITEM		GT650Ei D spec	GT650PEi D spec
Ignition type		ECU	←
Ignition timing		5 ° B.T.D.C. at 2,000 rpm	←
Spark plug		CR8E	←
Battery		12 V 12 Ah (MF)	←
Fuse	Main	30 A	←
	ECU	15 A	←
Head lamp	HI	12 V - H4 : 60 / 55 W × 1	←
	LO		
	Position	12 V - W5 W × 1	12 V - W5 W × 2
Turn signal lamp		12 V - RY10 W × 4	←
Brake / Tail lamp		LED type	←
License plate lamp		12 V - W5 W × 1	←
Tachometer lamp		LED type	←
High beam indicator lamp		LED type	←
Turn signal indicator lamp(right & left)		LED type	←
Neutral indicator lamp		LED type	←
Fuel indicator lamp		LCD type (Level type)	←
Coolant temperature indicator lamp		LCD type (Level type)	←
"FI"(Fuel Injection) check lamp		LED type	←

⊙ CAPACITIES

ITEM		GT650Ei D spec	GT650PEi D spec
Fuel tank		17.0 ℓ	←
Engine oil	Oil change	3,000 mℓ	←
	Oil and filter change	3,200 mℓ	←
	Engine overhaul	3,400 mℓ	←
Front fork oil capacity (One side)		380 cc	←

NOTE
The specifications are subject to change without notice.

SPECIFICATIONS [GT650SEi D spec & GT650REi D spec]

⊙ DIMENSIONS AND MASS

ITEM	GT650SEi D spec	GT650REi D spec
Overall length	2,090 mm (82.3 in)	←
Overall width	785 mm (30.9 in)	700 mm (27.6 in)
Overall height	1,135 mm (44.7 in)	←
Wheelbase	1,435 mm (56.5 in)	←
Ground clearance	175 mm (6.9 in)	165 mm (6.5 in)
Mass	210 kg (463 lbs)	215 kg (474 lbs)

⊙ ENGINE

ITEM	GT650SEi D spec	GT650REi D spec
Type	Four-stroke, DOHC, Liquid-cooled	←
Number of cylinder	V-2 cylinder	←
Bore	81.5 mm (3.21 in)	←
Stroke	62.0 mm (2.44 in)	←
Piston displacement	647 cm^3 (39.5 in^3)	←
Fuel system	Electric fuel Injection	←
Starter system	Electric starter	←
Lubrication system	Wet sump	←

⊙ TRANSMISSION

ITEM		GT650SEi D spec	GT650REi D spec
Clutch		Wet multi-plate type	←
Transmission		6-speed constant mesh	←
Gearshift pattern		1-down, 5-up	←
Final reduction		2.93	←
Gear ratio	1st	2.46	←
	2nd	1.60	←
	3rd	1.32	←
	4th	1.13	←
	5th	0.96	←
	6th	0.85	←
Drive chain		RK525XSO 108 links	←

⊙ CHASSIS

ITEM	GT650 S Ei D spec	GT650 R Ei D spec
Front suspension	Telescopic type	←
Rear suspension	Swingarm type	←
Steering angle	27 ° (right & left)	←
Caster	25.5 °	←
Trail	74 mm (2.91 in)	←
Front brake	Double disk brake	←
Rear brake	Disk brake	←
Front tire size	120/60 - ZR 17 55W	←
Rear tire size	160/60 - ZR 17 69W	←
Front fork stroke	120 mm (4.72 in)	←

⊙ ELECTRICAL

ITEM		GT650 S Ei D spec	GT650 R Ei D spec
Ignition type		ECU	←
Ignition timing		5 ° B.T.D.C. at 2,000 rpm	←
Spark plug		CR8E	←
Battery		12 V 12 Ah (MF)	←
Fuse	Main	30 A	←
	ECU	15 A	←
Head lamp	HI	12 V - H1 : 55 W × 1	←
	LO	12 V - H3 : 55 W × 1	←
	Position	12 V - W5 W × 1	←
Turn signal lamp		12 V - RY10 W × 4	←
Brake / Tail lamp		LED type	←
License plate lamp		12 V - W5 W × 1	←
Tachometer lamp		LED type	←
High beam indicator lamp		LED type	←
Turn signal indicator lamp(right & left)		LED type	←
Neutral indicator lamp		LED type	←
Fuel indicator lamp		LCD type (Level type)	←
Coolant temperature indicator lamp		LCD type (Level type)	←
“FI”(Fuel Injection) check lamp		LED type	←

⊙ CAPACITIES

ITEM		GT650 S Ei D spec	GT650 R Ei D spec
Fuel tank		17.0 ℓ	←
Engine oil	Oil change	3,000 mℓ	←
	Oil and filter change	3,200 mℓ	←
	Engine overhaul	3,400 mℓ	←
Front fork oil capacity (One side)		380 cc	481 cc

NOTE
The specifications are subject to change without notice.

FUNCTION OF EI SENSOR

★ ECU (Engine Control Unit, EI Control Unit)

: ECU decide the fuel injection volume and ignition time to adjust the fuel injector opening and closing rate which is considered the engine speed, intake air pressure, intake air volume, engine temperature, oxygen volume and throttle opening angle, etc.

★ EI (Electric fuel Injector)

: EI spray the fuel to intake pipe by ECU's injection signal.
Fuel which is needed combustion in the combustion chamber is supplied from the fuel tank.

★ GP switch (Gear Position Switch)

: GP switch is used when start / stop and control ECU as the converted electrical signal of the gear position is supplied ECU.

★ IAP sensor (Intake Air Pressure Sensor : IAPS)

: IAP sensor measure the pressure which is generated from the intake pipe and compare with the provided absolute pressure, then analogize the air volume indirectly and help to work the fuel injector properly.

★ IAT sensor (Intake Air Temperature Sensor : IATS)

: IAT sensor perceive the atmospheric temperature and is located the air cleaner case.

★ ISC solenoid (Idle Speed Control Solenoid)

: ISC solenoid is interlocked with the throttle body, so ECU control the engine idle speed.

★ O_2 sensor (Oxygen Sensor : O_2S)

: O_2 sensor measure the oxygen volume from the exhaust gas and convert the oxygen volume into voltage value, then communicate the output voltage to ECU.

★ Pick-up Coil

: Pick-up coil perceive the front and rear cylinder's engine speed and realtime of piston position.

★ RO switch (Roll Over Switch)

: RO switch is the fuel cut-off system when the motorcycle is leaned over 60˚for upset accident.

★ TP sensor (Throttle Position Sensor : TPS)

: TP sensor detect the throttle opening angle and is located the throttle body.
It decide the fuel injection volume and compensate the ignition time as inform idle · acceleration · deceleration condition and throttle full opening etc. to ECU.

★ WT sensor (Water Temperature Sensor : WTS)

: WT sensor is located on the cylinder block's water jacket, the intake pipe or the cylinder head coolant passage's thermostat part for contact with the coolant.
WT sensor is the NTC (Negative Temperature Coefficient) resister that measure the coolant temperature and inform ECU.

EI SYSTEM DIAGNOSIS

4-1

CONTENTS

PRECAUTIONS IN SERVICING ..... 18 [4-1-1]

EI SYSTEM TECHNICAL FEATURES ..... 22 [4-1-5]

SELF-DIAGNOSIS FUNCTION ..... 29 [4-1-12]

EI SYSTEM TROUBLESHOOTING ..... 41 [4-1-24]

- CUSTOMER COMPLAINT ANALYSIS ..... 41 [4-1-24]
- SELF-DIAGNOSTIC PROCEDURES ..... 43 [4-1-26]
- SELF-DIAGNOSIS RESET PROCEDURE ..... 46 [4-1-29]
- MALFUNCTION CODE AND DEFECTIVE CONDITION ..... 48 [4-1-31]
- "0031", "0032", "0037" or "0038" OXYGEN SENSOR HEATER CIRCUIT MALFUNCTION & "0131", "0132", "0137" or "0138" OXYGEN SENSOR CIRCUIT MALFUNCTION ..... 52 [4-1-35]
- "0107" or "0108" IAP SENSOR CIRCUIT MALFUNCTION ..... 54 [4-1-37]
- "0112" or "0113" IAT SENSOR CIRCUIT MALFUNCTION ..... 56 [4-1-39]
- "0117" or "0118" WT SENSOR CIRCUIT MALFUNCTION ..... 58 [4-1-41]
- "0122" or "0123" TP SENSOR CIRCUIT MALFUNCTION ..... 60 [4-1-43]
- "0201" or "0202" FUEL INJECTOR CIRCUIT MALFUNCTION ... 63 [4-1-46]
- "0230" or "0232" FUEL PUMP RELAY CIRCUIT MALFUNCTION 65 [4-1-48]
- "0336" or "0337" PICK-UP COIL CIRCUIT MALFUNCTION ..... 66 [4-1-49]
- "0351" or "0352" IGNITION COIL MALFUNCTION ..... 68 [4-1-51]
- "0500" SPEEDO SENSOR MALFUNCTION ..... 69 [4-1-52]
- "0505" ISC SOLENOID RANGE ABNORMAL ..... 70 [4-1-53]
- "0562" or "0563" BATTERY VOLTAGE MALFUNCTION ..... 71 [4-1-54]
- "0650" "FI" CHECK LAMP CIRCUIT MALFUNCTION ..... 72 [4-1-55]
- "0850" GP or CLUTCH LEVER SWITCH CIRCUIT MALFUNCTION ..... 73 [4-1-56]

SENSORS ..... 75 [4-1-58]

PRECAUTIONS IN SERVICING

When handling the component parts or servicing the EI system, observe the following points for the safety of the system.

⊙ ELECTRICAL PARTS

■ CONNECTOR / COUPLER

- When connecting a connector, be sure to push it in until a click is felt.
- With a lock type coupler, be sure to release the lock when disconnecting, and push it in fully till the works when connecting it.
- When disconnecting the coupler, be sure to hold the coupler body and do not pull the lead wires.
- Inspect each terminal on the connector / coupler for looseness or bending.

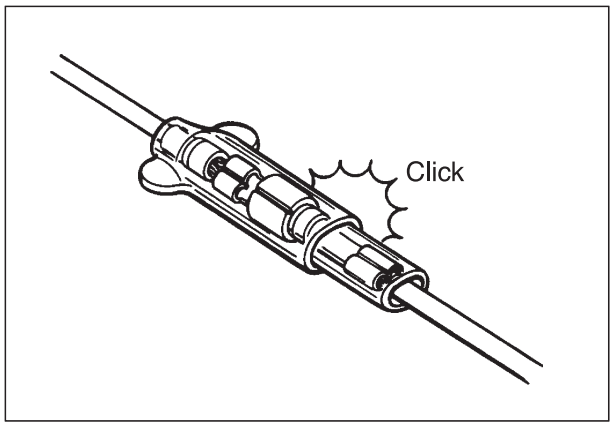

- Inspect each terminal for corrosion and contamination.
  The terminals must be clean and free of any foreign material which could impede proper terminal contact.

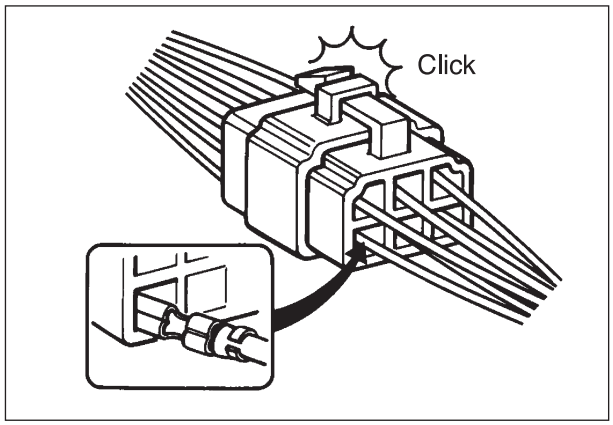

- Inspect each lead wire circuit for poor connection by shaking it by hand lightly. If any abnormal condition is found, repair or replace.

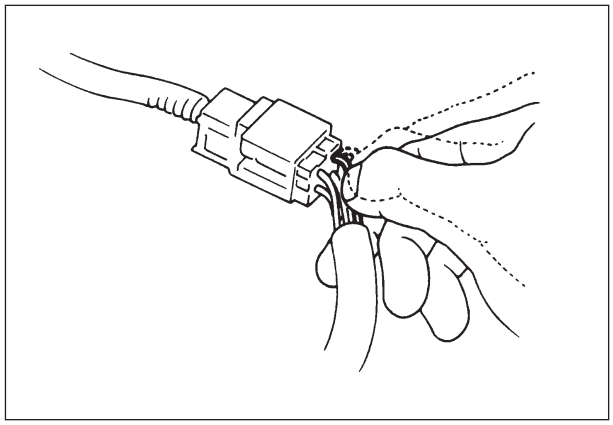

- When taking measurements at electrical connectors using a tester probe, be sure to insert the probe from the wire harness side (backside) of the connector / coupler.

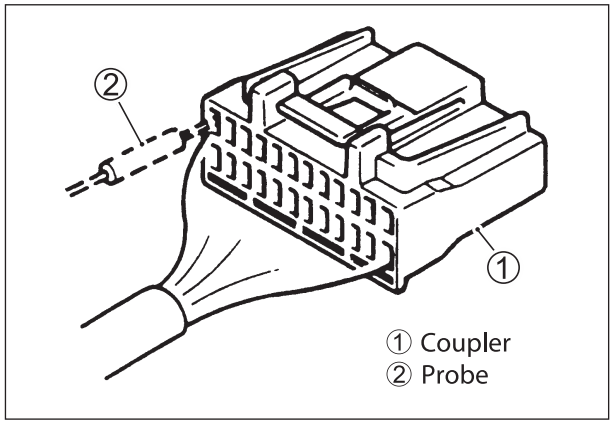

- When connecting meter probe from the terminal side of the coupler (connection from harness side not being possible), use extra care not to force and cause the male terminal to bend or the female terminal to open.
  Connect the probe as shown to avoid opening of female terminal.
  Never push in the probe where male terminal is supposed to fit.
- Check the male connector for bend and female connector for excessive opening. Also check the coupler for locking (looseness), corrosion, dust, etc.

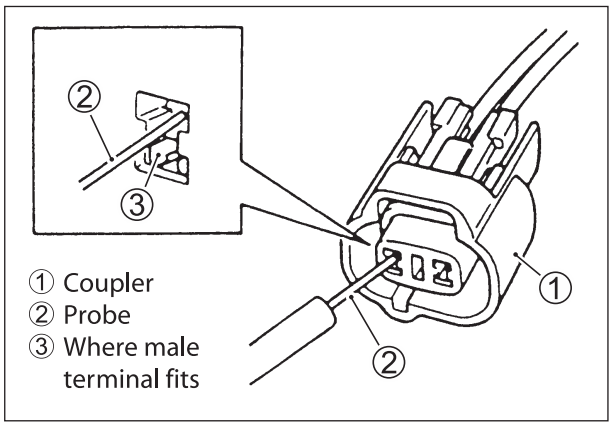

⊙ FUSE

- When a fuse blows, always investigate the cause to correct it and then replace the fuse.
- Do not use a fuse of a different capacity.
- Do not use wire or any other substitute for the fuse.

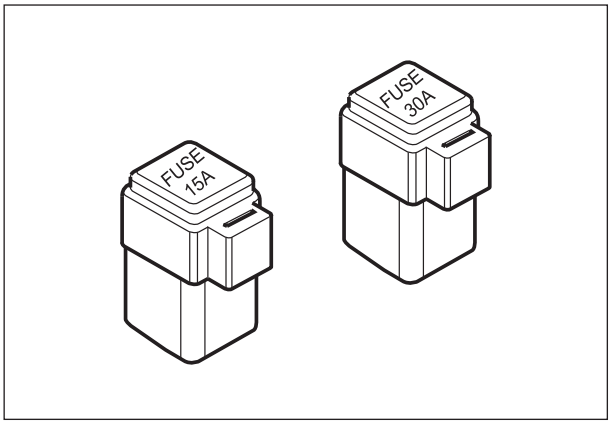

⊙ ECU / VARIOUS SENSORS

- Since each component is a high-precision part, great care should be taken not to apply any sharp impacts during removal and installation.

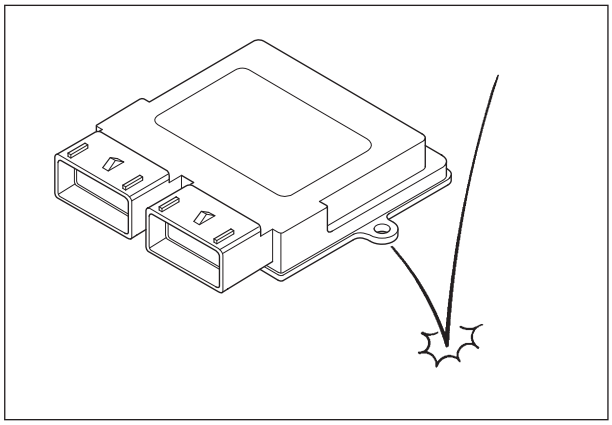

- Be careful not to touch the electrical terminals of the ECU.
  The static electricity from your body may damage this part.

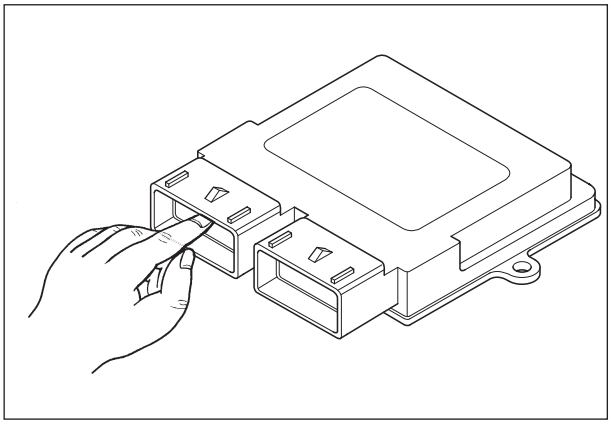

- When disconnecting and connecting the ECU, make sure to turn “OFF” the ignition switch, or electronic parts may get damaged.

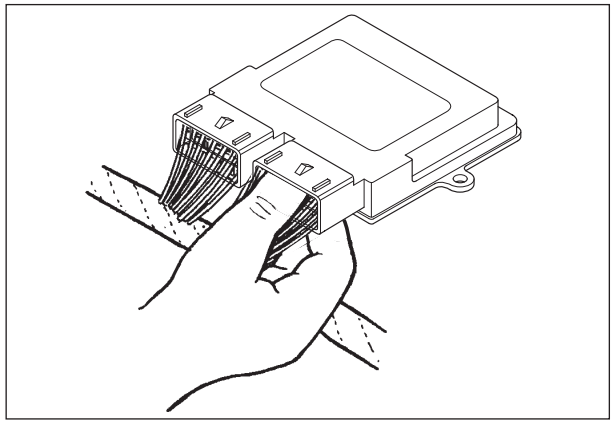

- Battery connection in reverse polarity is strictly prohibited.
  Such a wrong connection will damage the components of the EI system instantly when reverse power is applied.

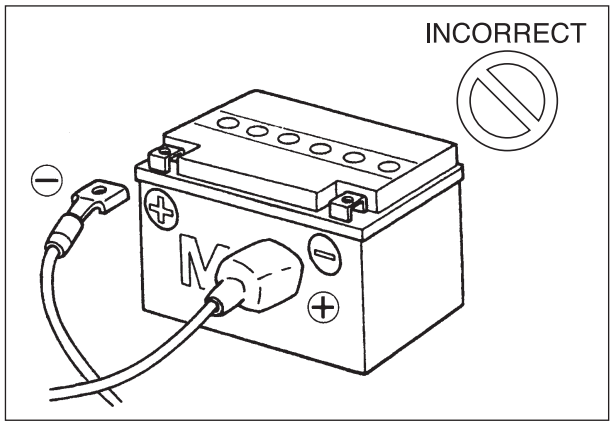

- Removing any battery terminal of a running engine is strictly prohibited.
  The moment such removal is made, damaging counter electromotive force will be applied to the ECU which may result in serious damage.

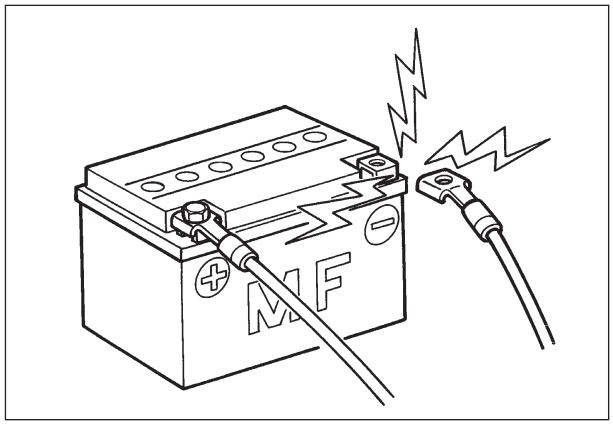

- Before measuring voltage at each terminal, check to make sure that battery voltage is 11V or higher. Terminal voltage check at low battery voltage will lead to erroneous diagnosis.

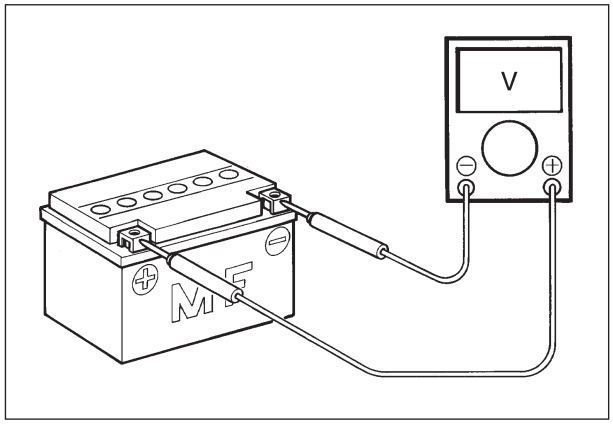

- Never connect an ohmmeter to the ECU with its coupler connected. If attempted, damage to the ECU or sensors may result.
- Be sure to use a specified voltmeter / ohmmeter. Otherwise, accurate measurements may not be obtained and personal injury may result.

⊙ USING TESTERS

- Use well-charged batteries in the tester.
- Be sure to set the tester to the correct testing range.

■ USING THE TESTER

- Incorrectly connecting the ⊕ and ⊖ probes may cause the inside of the tester to burnout.
- If the voltage and current are not known, make measurements using the highest range.
- After using the tester, turn the power off.

EI SYSTEM TECHNICAL FEATURES

⊙『 GV650 PRO D spec 』&『 GT650/P/S/R EI D spec 』

EI SYSTEM'S CONTROL DIAGRAM

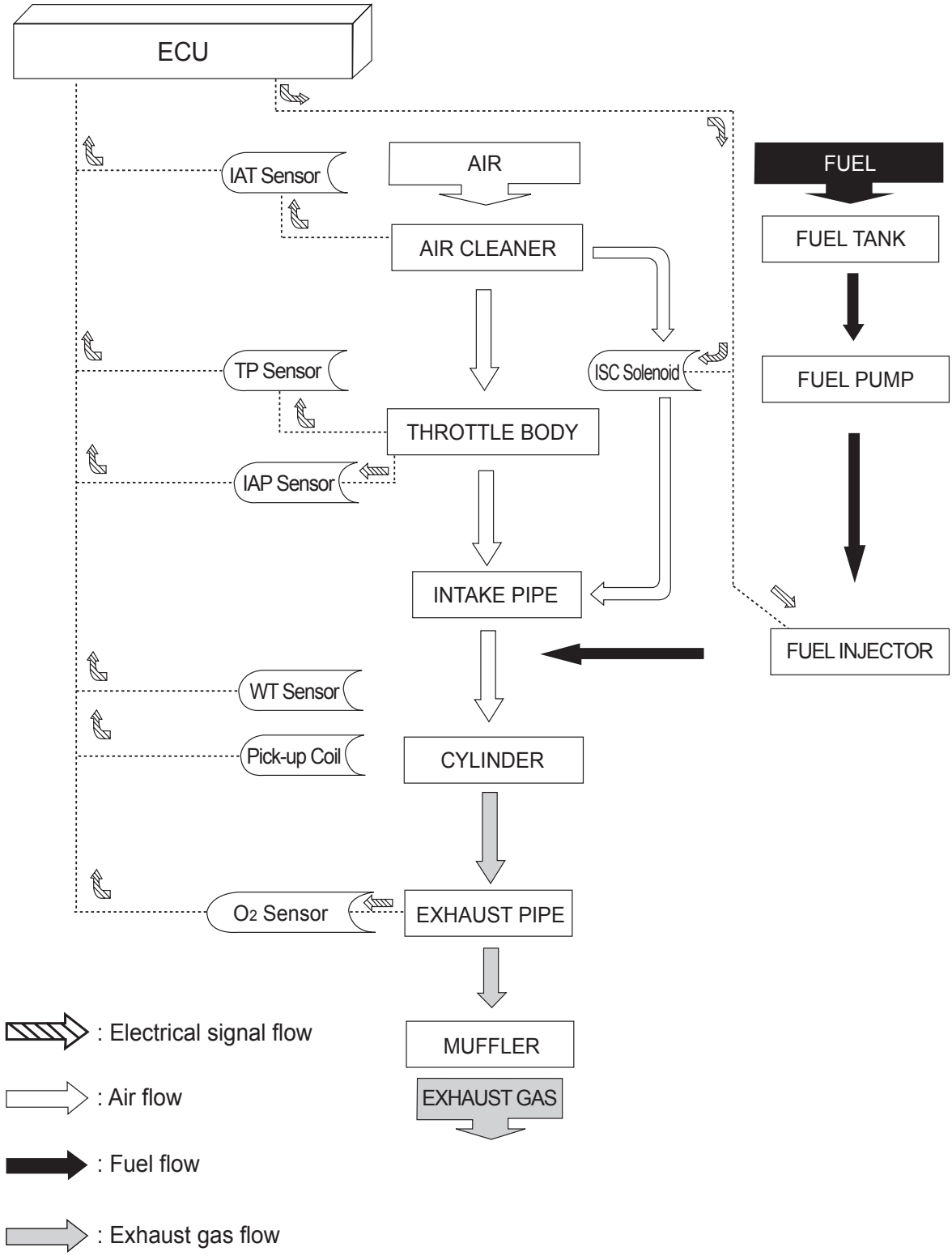

⊙ INJECTION TIME (INJECTION VOLUME)

The factors to determine the injection time include the basic fuel injection time, which is calculated on the basis of intake air pressure, engine speed and throttle opening angle, and various compensations.
These compensations are determined according to the signals from various sensors that detect the engine and driving conditions.

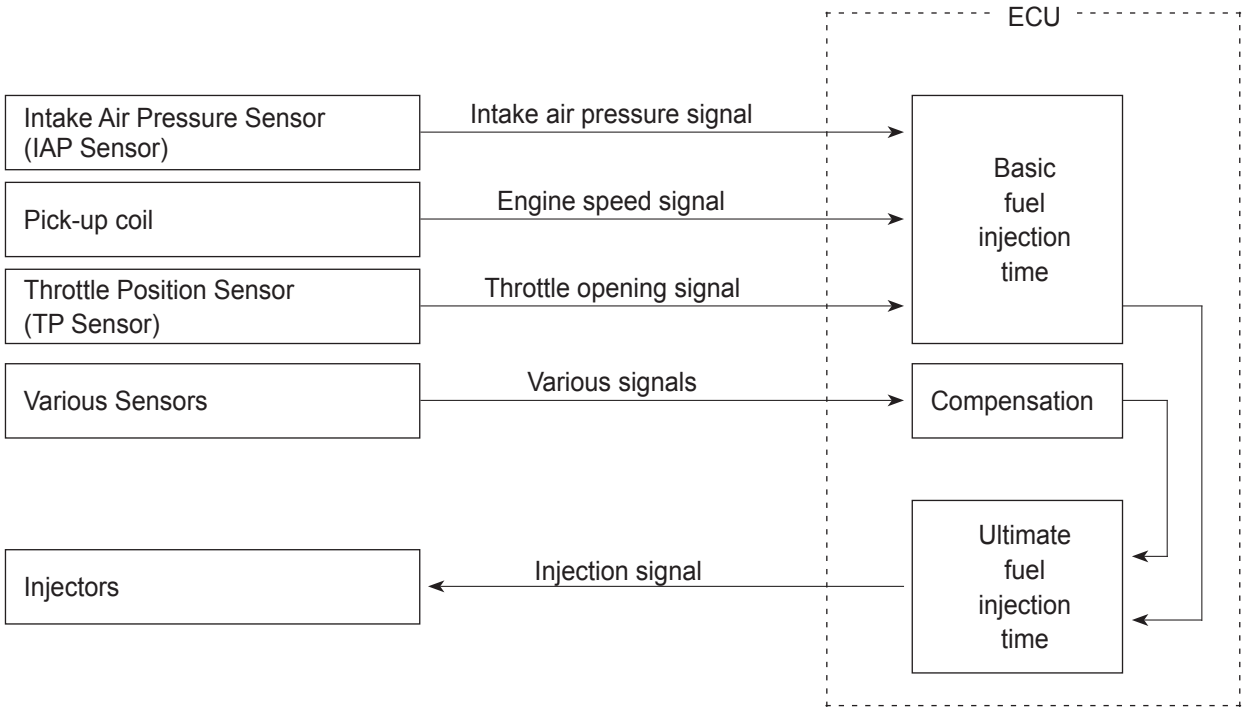

⊙ COMPENSATION OF INJECTION TIME (VOLUME)

The following different signals are output from the respective sensors for compensation of the fuel injection time (volume).

SIGNAL	DESCRIPTION
WATER COOLANT TEMPERATURE SENSOR SIGNAL	When engine coolant temperature is low, injection time (volume) is increased.
INTAKE AIR TEMPERATURE SENSOR SIGNAL	When intake air temperature is low, injection time (volume) is increased.
BATTERY VOLTAGE SIGNAL	ECU operates on the battery voltage and at the same time, it monitors the voltage signal for compensation of the fuel injection time (volume). A longer injection time is needed to adjust injection volume in the case of low voltage.
ENGINE RPM SIGNAL	At high speed, the injection time (volume) is increased.
STARTING SIGNAL	When starting engine, additional fuel is injected during cranking engine.
ACCELERATION SIGNAL / DECELERATION SIGNAL	During acceleration, the fuel injection time (volume) is increased in accordance with the throttle opening speed and engine rpm. During deceleration, the fuel injection time (volume) is decreased.

⊙ INJECTION STOP CONTROL

SIGNAL	DESCRIPTION
ROLL OVER SWITCH SIGNAL (FUEL CUT-OFF)	When the motorcycle rolls over, the roll over switch sends a signal to the ECU. Then, this signal cuts OFF current supplied to the fuel pump, fuel injector and ignition coil.
OVER-REV. LIMITER SIGNAL	The fuel injectors stop operation when engine rpm reaches rev. limit rpm.

⊙ EI SYSTEM PARTS LOCATION [GV650 PRO D spec]

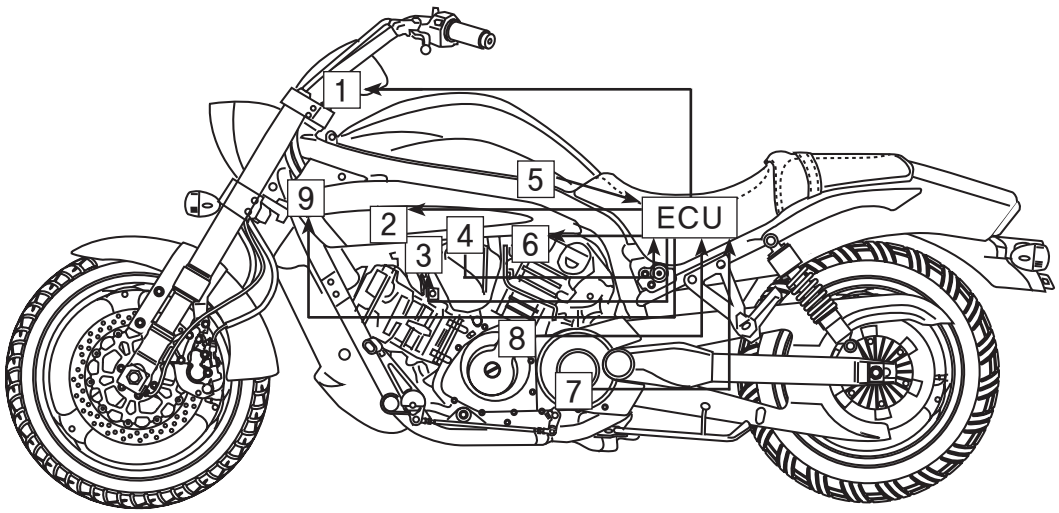

① Speedometer
② Fuel pump relay
③ Fuel injector, NO.1
④ TP sensor
⑤ IAT sensor
⑥ Fuel injector, NO.2
⑦ GP switch
⑧ Pick-up coil
⑨ Ignition coil, NO.1

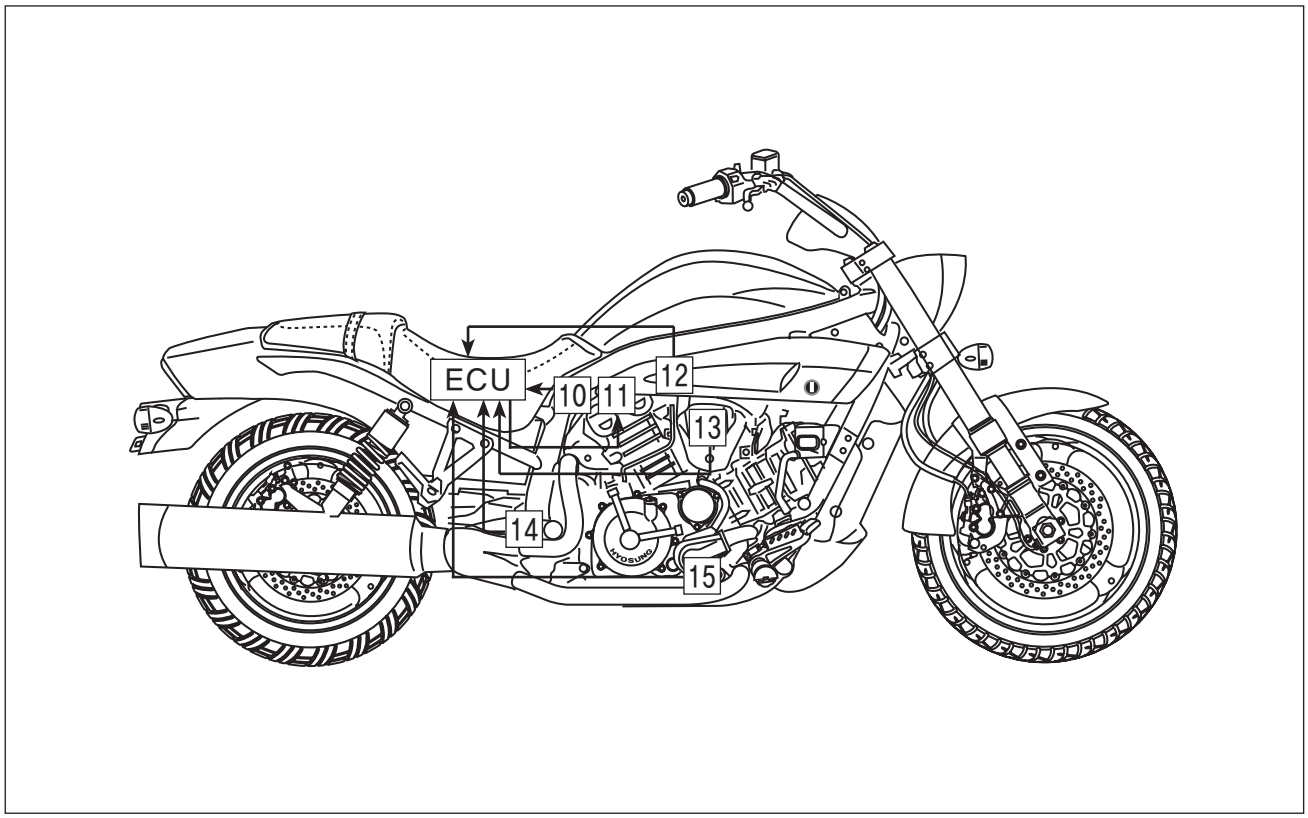

⑩ RO switch
⑪ Ignition coil, NO.2
⑫ IAP sensor
⑬ WT sensor
⑭ Oxygen sensor, NO.2
⑮ Oxygen sensor, NO.1

⊙ EI SYSTEM PARTS LOCATION [GT650I/P/S/R EI D spec]

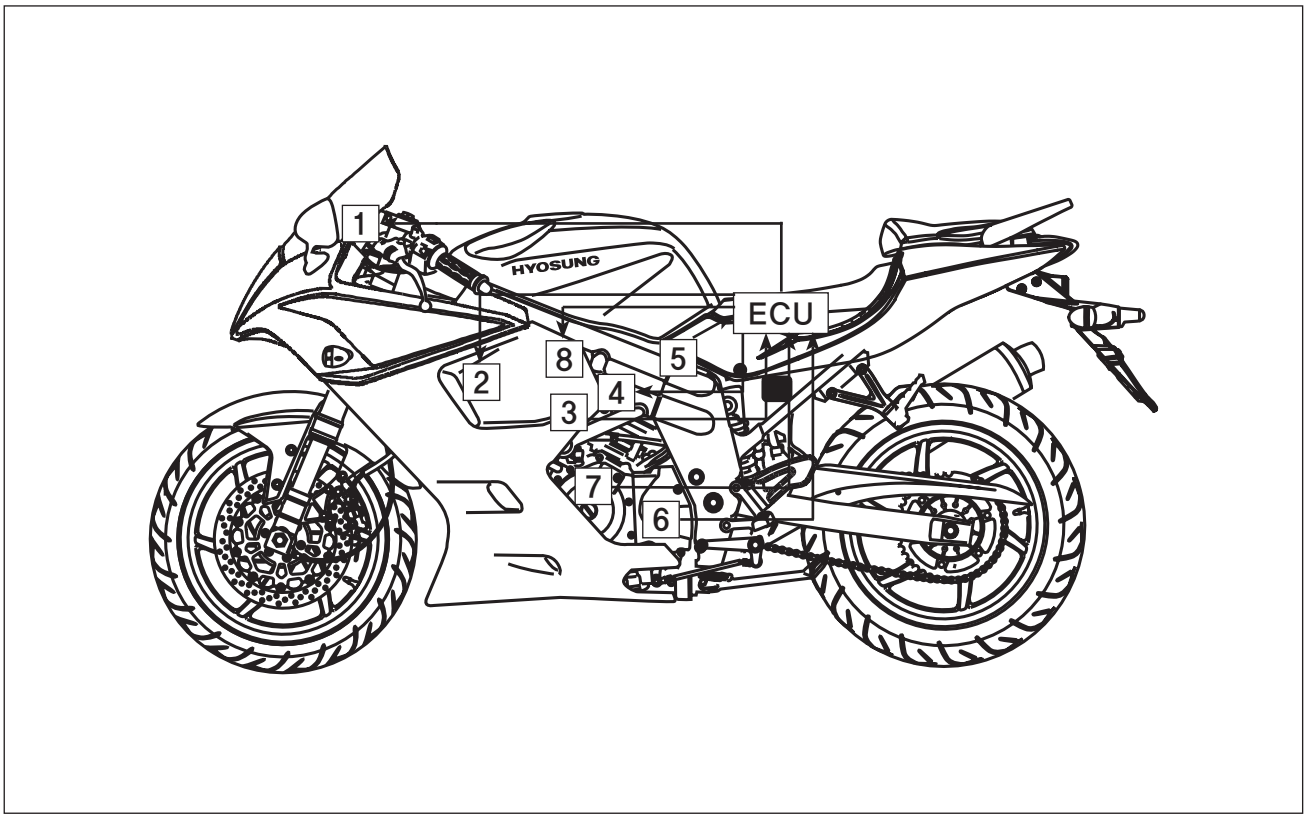

① Speedometer
② Fuel injector, NO.1
③ TP sensor
④ Fuel injector, NO.2
⑤ IAT sensor
⑥ GP switch
⑦ Pick-up coil
⑧ Ignition coil, NO.2

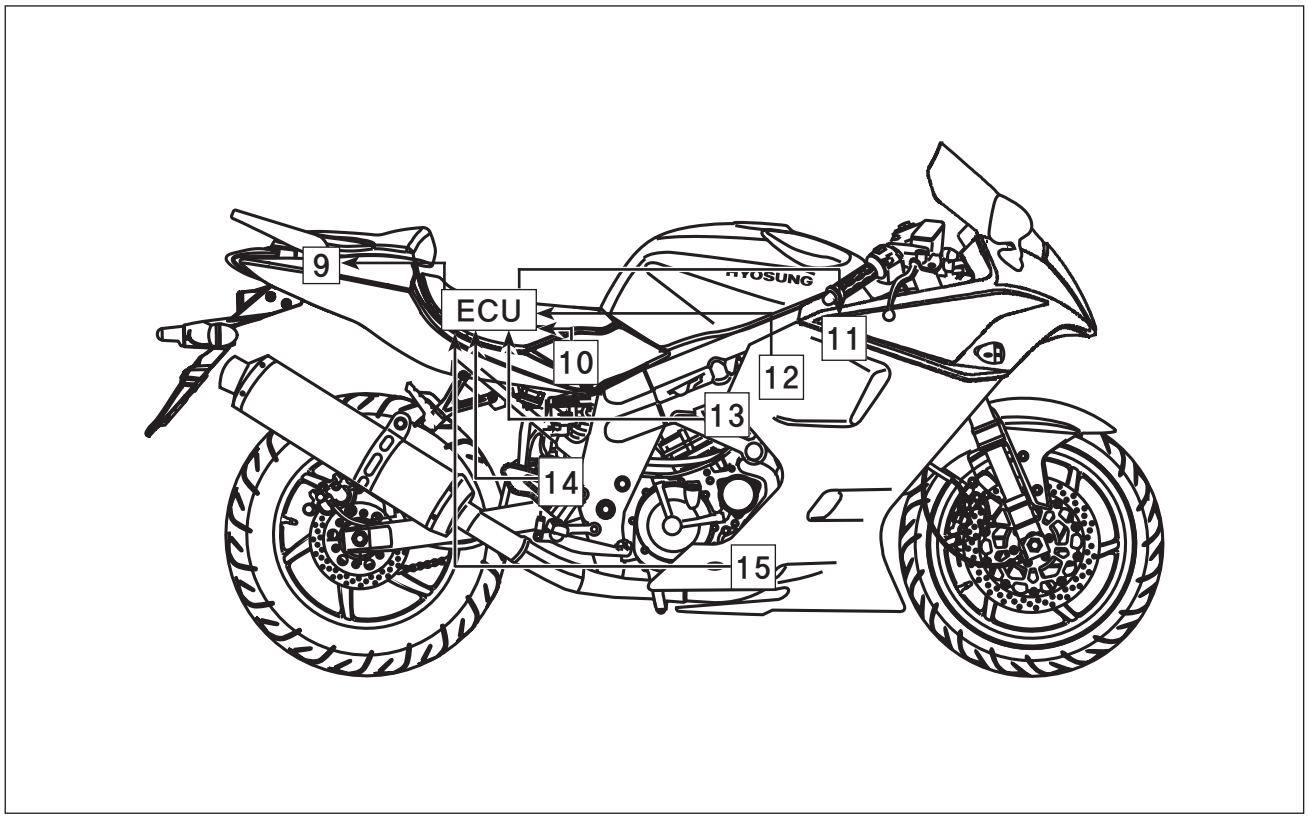

⑨ Fuel pump relay
⑩ RO switch
⑪ Ignition coil, NO.1
⑫ IAP sensor
⑬ WT sensor
⑭ Oxygen sensor, NO.2
⑮ Oxygen sensor, NO.1

SELF-DIAGNOSIS FUNCTION

The self-diagnosis function is incorporated in the ECU.
The function has two modes, “USER MODE” and “DEALER MODE”.
The user can be notified by the LCD display panel Ⓑ and the “FI” check lamp “ (FI) ” Ⓒ.
To check the function of the individual EI system devices, the dealer mode is prepared.
In this check, the special tool and additional operations is necessary to read the code of the malfunction items.

⊙ USER MODE

GV650 PRO D spec

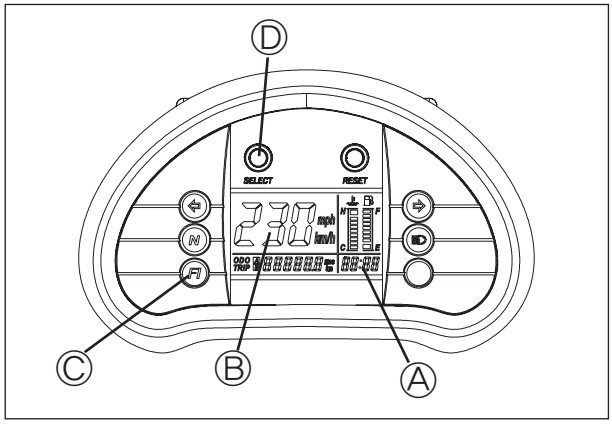

GT650 PEi D spec & GT650 Ei D spec

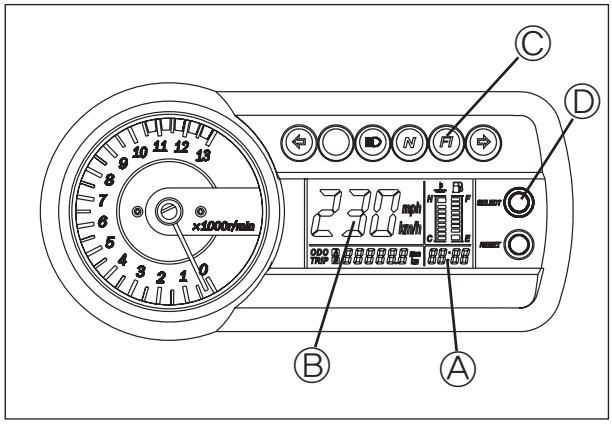

GT650 REi D spec & GT650 SEi D spec

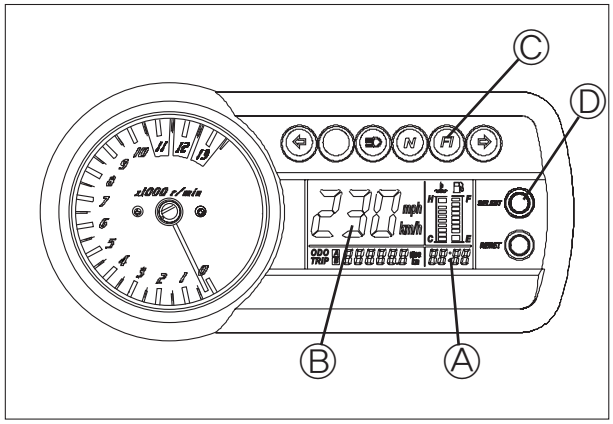

4-1-13 EI SYSTEM DIAGNOSIS

The LCD display panel Ⓑ indicates “FI” letters and speedometer alternately, and the “FI” check lamp “ (FI) ” Ⓒ comes on and remains lit when the ignition switch is set to “ON” position with the engine stopped as a test of injection system operation.

As soon as the engine starts, the LCD display panel Ⓑ indicates speedometer continuously and “FI” check lamp “ (FI) ” Ⓒ should go out.

If the fuel injection system fails,

A the LCD display panel Ⓑ does not indicate “FI” letters and speedometer alternately, and the “FI” check lamp “ (FI) ” Ⓒ does not come on
when the ignition switch is set to “ON” position with the engine stopped.

B the LCD display panel Ⓑ indicates “FI” letters and speedometer alternately, and the “FI” check lamp “ (FI) ” Ⓒ comes on and remains lit
after the engine start.

CLASSIFICATION	MALFUNCTION	LCD (DISPLAY) INDICATION Ⓑ	“FI” CHECK LAMP INDICATION Ⓒ	REMARKS
IGNITION SWITCH “ON” POSITION	“NO”	Indicates “FI” letters and speedometer alternately.	“FI” check lamp comes on continually.	
	“YES”	Indicates “FI” letters and speedometer alternately.	“FI” check lamp comes on continually.	
ENGINE RUNNING	“NO”	Indicates speedometer.	“FI” check lamp goes off.	
	“YES”	Indicates “FI” letters and speedometer alternately.	“FI” chek lamp comes on continually.	

⊙ DEALER MODE

The defective function is memorized in the ECU.
The memorized malfunction code is displayed on the clock screen Ⓐ or with blinks signal of the "FI" check lamp " Ⓕ " Ⓒ.
Malfunction means that the ECU does not receive signal from the devices or fault signal received.
These affected devices are indicated in the code form on the clock screen Ⓐ or displayed with blinks signal of the "FI" check lamp " Ⓕ " Ⓒ.

■ A. LCD (DISPLAY) PANEL

To confirm the memorized malfunction code through the clock screen Ⓐ :

1-1. Remove the front seat. [GV650 PRO D spec]
1-2. Remove the rear seat. [GT650/P/S/R EI D spec]
2. Connect the special tool to the dealer mode coupler at the wiring harness, and the ignition switch is set to the "ON" position.

TOOL **Mode select switch : 09900-27000**

3. Turn the special tool's switch to the "ON" position.
4. Press the select switch Ⓓ (in the normal mode) for 2 seconds to the clock screen Ⓐ is 『the clock reset mode』.
   In that state, continuously pressing the select switch Ⓓ for 3 seconds, the clock screen Ⓐ is displayed 『the malfunction code mode』.

NOTE
This time, if not connect the special tool correctly, the LCD display panel Ⓑ indicates the "cHE" letters. Pressing the select switch Ⓓ for 0.6 ~ 1 seconds, the "cHE" letters disappear.

5. The memorized malfunction code is displayed in the code form on the clock screen Ⓐ.
6. Start the engine and repeat the above procedure.
7. Check the malfunction code to determine the malfunction part.
8. Pressing the select switch Ⓓ (in the malfunction code mode) for 0.6 ~ 1 seconds, 『the malfunction code mode』 is changed into the CLOCK.

NOTE
The malfunction code of the clock screen Ⓐ is displayed the current code(s).

GV650 PRO D spec

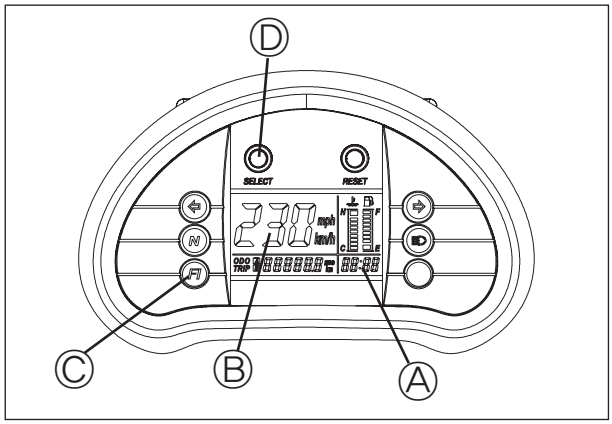

GT650 PEi D spec &
GT650 Ei D spec

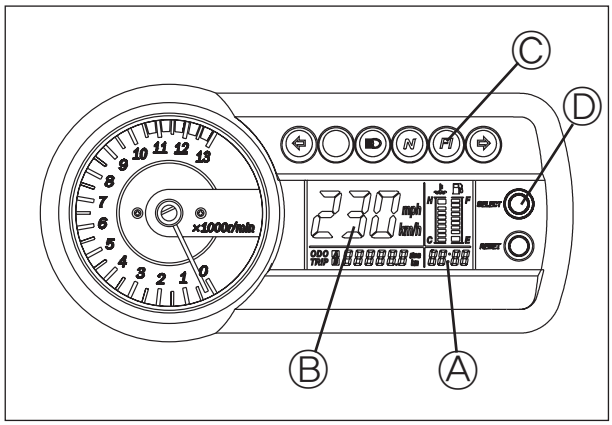

GT650 REi D spec &
GT650 SEi D spec

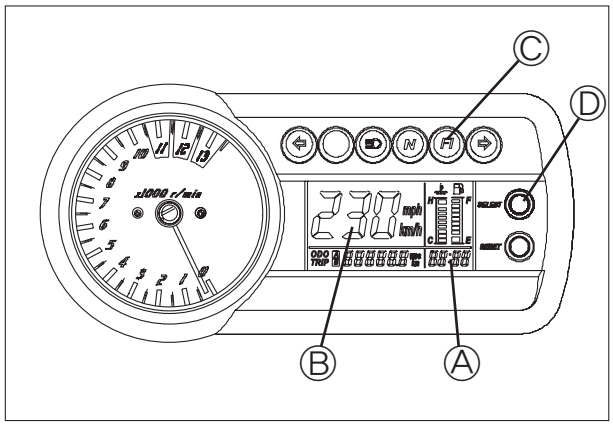

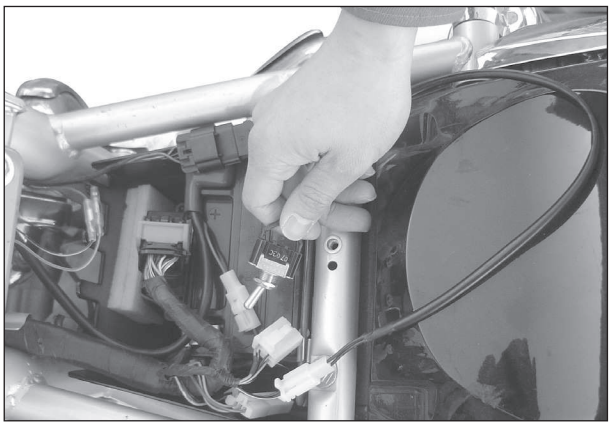

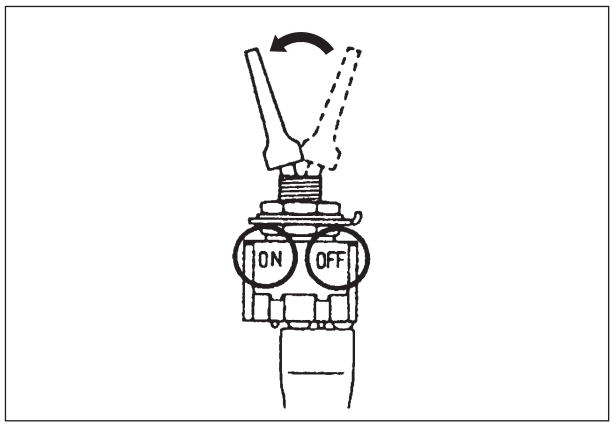

⚠ CAUTION

❖ **Confirm the malfunction code after turning the ignition switch "ON" position and starting the engine separately.**

❖ **The dealer mode coupler of the wiring harness is located under the front seat. [GV650 PRO D spec]**
The dealer mode coupler of the wiring harness is located under the rear seat.
[GT650/P/S/R EI D spec]

CLASSIFICATION	MALFUNCTION	CLOCK SCREEN INDICATION Ⓐ	"FI" CHECK LAMP INDICATION Ⓒ	INDICATION MODE
IGNITION SWITCH "ON" POSTION	"NO"	noEr	"FI" check lamp comes on continually.	
	"YES"	**** code is indicated in order of occurrence.	"FI" check lamp comes on continually.	For each 2 sec., code is indicated.
ENGINE RUNNING	"NO"	CLOCK	"FI" check lamp goes off.	
	"YES"	**** code is indicated in order of occurrence.	"FI" check lamp comes on continually.	For each 2 sec., code is indicated.

NOTE

Pressing the select switch Ⓓ (in the "noEr" display state) for 0.6 ~ 1 seconds, it is changed into the CLOCK.

■ B. "FI" CHECK LAMP

To confirm the memorized malfunction code through the "FI" check lamp " Ⓐ " Ⓒ :

1. Turn the ignition switch alternately, "ON" and "OFF" position, for 2 seconds by three times.

⚠ CAUTION

Take special care when operating above procedure.
If the ignition switch is turned alternately, "ON" and "OFF" position, for 2 seconds by five times, the ECU is initialized.

2. The memorized malfunction code is displayed with blinks signal of the "FI" check lamp " Ⓐ " Ⓒ.
3. Check the malfunction code to determine the malfunction part.

NOTE

The malfunction code of the "FI" check lamp Ⓒ is displayed both the current code(s) and history code(s).

GV650 PRO D spec

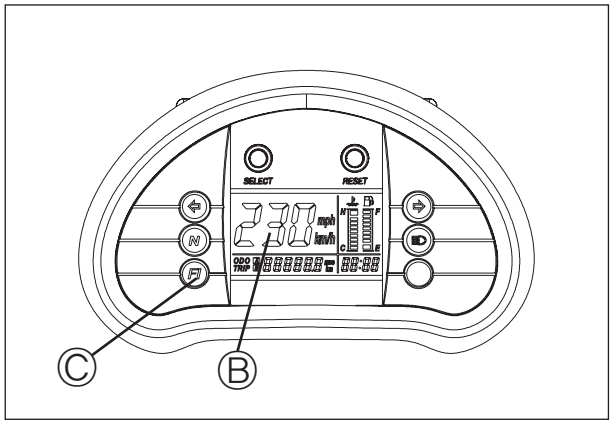

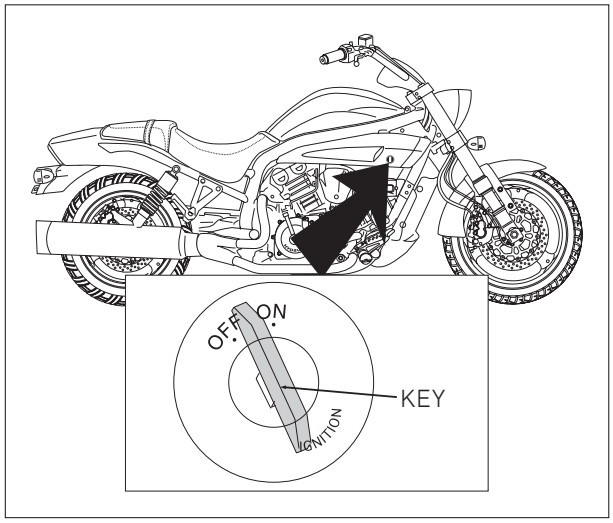

GT650 PEi D spec & GT650 Ei D spec

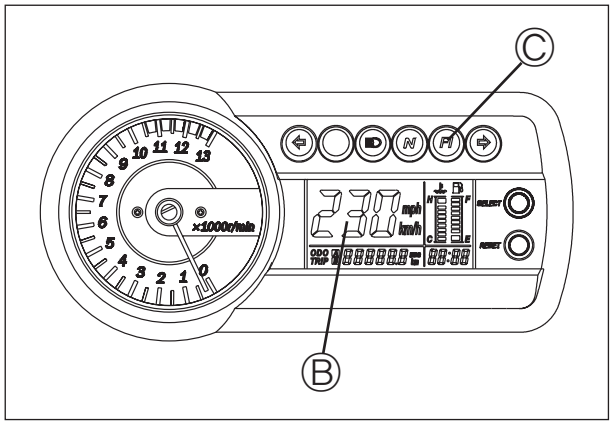

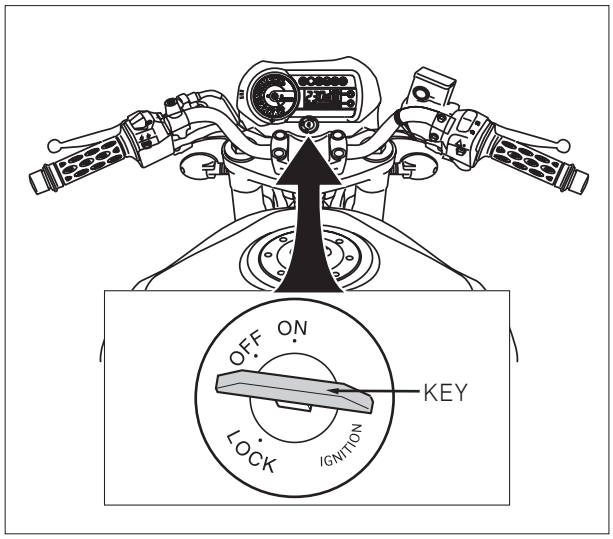

GT650REi D spec & GT650SEi D spec

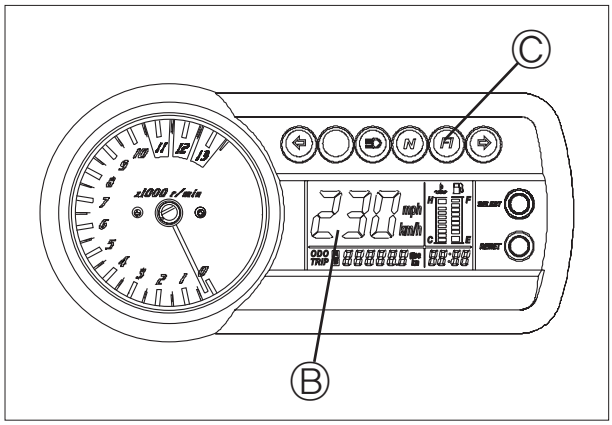

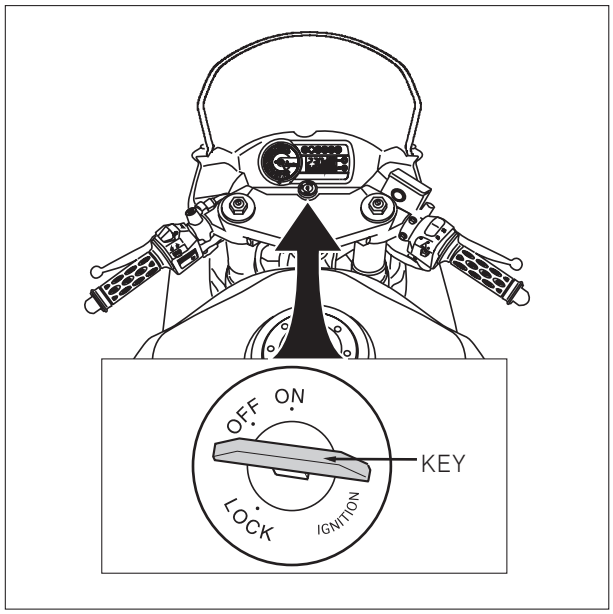

MALFUNCTION	LCD (DISPLAY) INDICATION Ⓑ	"FI" CHECK LAMP INDICATION Ⓒ
"NO"	Indicates "FI" letters and speedometer alternately.	"FI" check lamp comes on continually.
"YES"		Malfunction code is blinked in order of occurrence.

A CODE	B CODE	
	MALFUNCTION PART	REMARKS
0031		
	NO.1 O_2 S heater Circuit Low Voltage	For NO.1 cylinder
0032		
	NO.1 O_2 S heater Circuit High Voltage	For NO.1 cylinder
0037	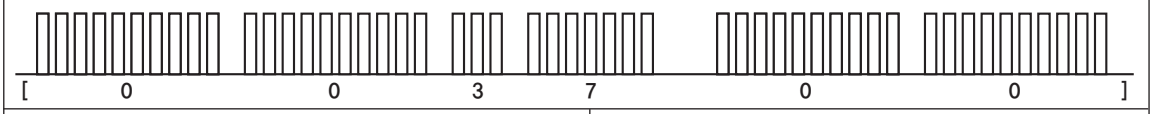	
	NO.2 O_2 S heater Circuit Low Voltage	For NO.2 cylinder
0038		
	NO.2 O_2 S heater Circuit High Voltage	For NO.2 cylinder
0107		
	IAPS Circuit Low Voltage or Open	
0108	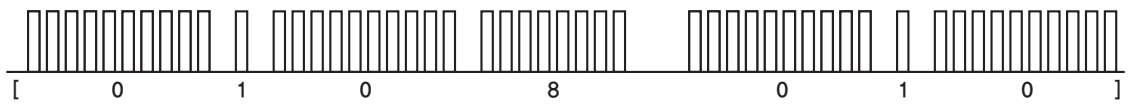	
	IAPS Circuit High Voltage	
0112		
	IATS Circuit Low Voltage	
0113		
	IATS Circuit High Voltage or Open	

※ A CODE : For LCD (DISPLAY) indication

B CODE : For “FI” check lamp indication

A CODE	B CODE	
	MALFUNCTION PART	REMARKS
0117	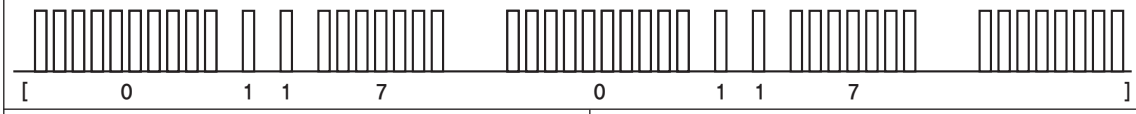	
	WTS Circuit Low Voltage	
0118		
	WTS Circuit High Voltage or Open	
0122		
	TPS Circuit Low Voltage or Open	
0123		
	TPS Circuit High Voltage	
0131	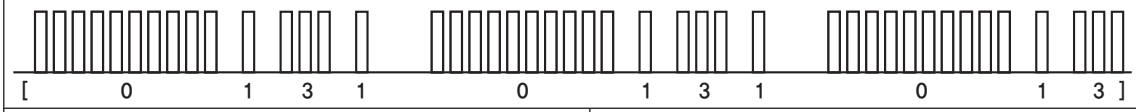	
	NO.1 O_2 S Circuit Low Voltage	For NO.1 cylinder
0132		
	NO.1 O_2 S Circuit High Voltage	For NO.1 cylinder
0137	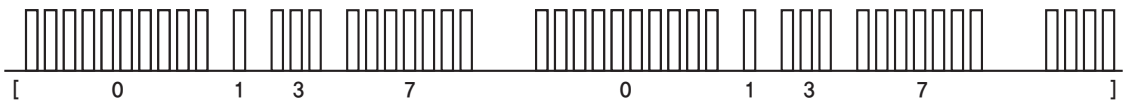	
	NO.2 O_2 S Circuit Low Voltage	For NO.2 cylinder
0138		
	NO.2 O_2 S Circuit High Voltage	For NO.2 cylinder

※ A CODE : For LCD (DISPLAY) indication

B CODE : For “FI” check lamp indication

A CODE	B CODE	
	MALFUNCTION PART	REMARKS
0201		
	NO.1 Fuel injector Circuit Malfunction	For NO.1 cylinder
0202		
	NO.2 Fuel injector Circuit Malfunction	For NO.2 cylinder
0230		
	Fuel pump relay Circuit Low Voltage or Open	
0232		
	Fuel pump relay Circuit High Voltage	
0336		
	Pick-up coil Noisy Signal	
0337		
	Pick-up coil No Signal	
0351		
	NO.1 IG coil Malfunction	For NO.1 cylinder
0352		
	NO.2 IG coil Malfunction	For NO.2 cylinder

※ A CODE : For LCD (DISPLAY) indication

B CODE : For “FI” check lamp indication

A CODE	B CODE	
	MALFUNCTION PART	REMARKS
0500	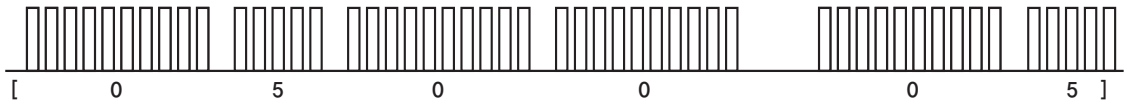	
	Speedo sensor Malfunction	
0505		
	ISC Error	
0562	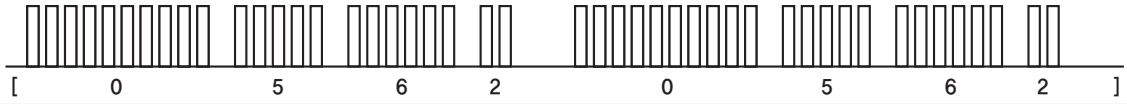	
	Battery Voltage Low	
0563		
	Battery Voltage High	
0650		
	“FI” check lamp Circuit Malfunction	
0850		
	GP or Clutch lever Switch Circuit Malfunction	

※ A CODE : For LCD (DISPLAY) indication

B CODE : For “FI” check lamp indication

■ LCD (DISPLAY) INDICATION

In the clock screen Ⓐ, the malfunction code is indicated in order of occurrence.

■ "FI" CHECK LAMP INDICATION

In the "FI" check lamp " Ⓕ " Ⓒ, the malfunction code is blinked in order of occurrence.

GV650 PRO D spec

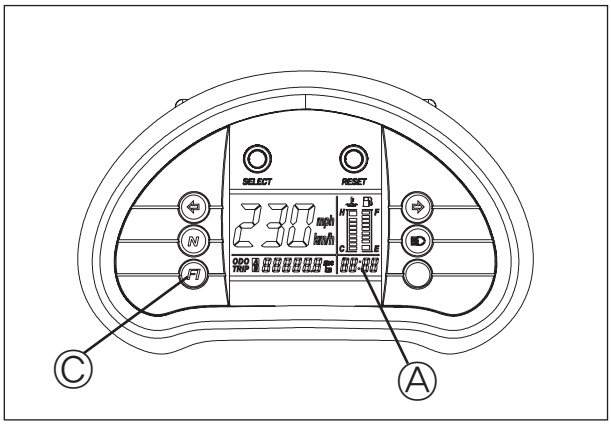

GT650 PEi D spec & GT650 Ei D spec

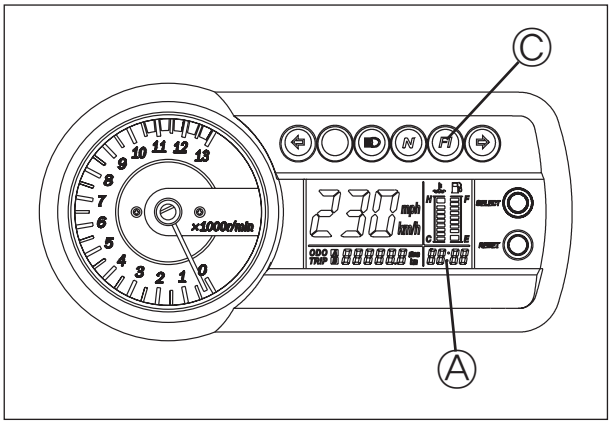

GT650 REi D spec & GT650 SEi D spec

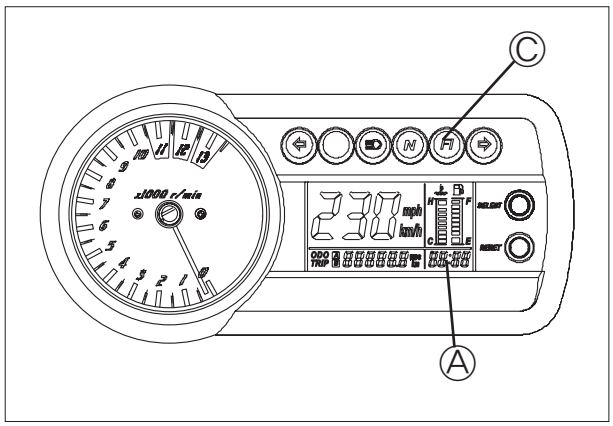

EI SYSTEM TROUBLESHOOTING

CUSTOMER COMPLAINT ANALYSIS

Record details of the problem (failure, complaint) and how it occurred as described by the customer.
For this purpose, use of such an inspection form will facilitate collecting information to the point required for proper analysis and diagnosis.

■ EXAMPLE : CUSTOMER PROBLEM INSPECTION FORM

User name :	Model :	VIN :	
Date of issue :	Date Reg. :	Date of problem :	Mileage :

"FI" Check lamp	☐ Always ON ☐ Sometimes ON ☐ Always OFF ☐ Good condition
Malfunction display / code (LCD panel) or Blinks signal ("FI" check lamp)	☐ No code ☐ Malfunction code ( )

PROBLEM SYMPTOMS	
☐ **Difficult Starting** ☐ No cranking ☐ No initial combustion ☐ No combustion ☐ Poor starting at (☐ cold ☐ warm ☐ always) ☐ Other _____	☐ **Poor Driveability** ☐ Hesitation on acceleration ☐ Back fire / ☐ After fire ☐ Lack of power ☐ Surging ☐ Abnormal knocking ☐ Engine rpm jumps briefly ☐ Other _____
☐ **Poor Idling** ☐ Poor fast Idle ☐ Abnormal idling speed (☐ High ☐ Low) (rpm) ☐ Unstable ☐ Hunting (rpm. to rpm) ☐ Other _____	☐ **Engine Stall when** ☐ Immediately after start ☐ Throttle valve is opened ☐ Throttle valve is closed ☐ Load is applied ☐ Other _____
☐ OTHERS :	

MOTORCYCLE / ENVIRONMENTAL CONDITION WHEN PROBLEM OCCURS	
Environmental condition	
Weather	☐ Fair ☐ Cloudy ☐ Rain ☐ Snow ☐ Always ☐ Other
Temperature	☐ Hot ☐ Warm ☐ Cool ☐ Cold (°F / °C) ☐ Always
Frequency	☐ Always ☐ Sometimes (times / day, month) ☐ Only once
	☐ Under certain condition
Road	☐ Urban ☐ Suburb ☐ Highway ☐ Mountainous (☐ Uphill ☐ Downhill)
	☐ Tarmacadam ☐ Gravel ☐ Other
Motorcycle condition	
Engine condition	☐ Cold ☐ Warming up phase ☐ Warmed up ☐ Always ☐ Other at starting
	☐ Immediately after start ☐ Racing without load ☐ Engine speed (rpm)
Motorcycle condition	During driving : ☐ Constant speed ☐ Accelerating ☐ Decelerating
	☐ Right hand corner ☐ Left hand corner ☐ At stop
	☐ Motorcycle speed when problem occurs (km/h, Mile/h)
	☐ Other _____

NOTE

The above form is a standard sample.
If should be modified according to conditions characteristic of each market.

SELF-DIAGNOSTIC PROCEDURES

Don't disconnect couplers from ECU, battery cable from battery, ECU ground wire harness from engine or main fuse before confirming malfunction code (self-diagnostic trouble code) stored in memory.

The memorized malfunction code is displayed in the code form on the clock screen Ⓐ or with blinks signal of the "FI" check lamp " (FI) " Ⓒ.

To check malfunction code, read SELF-DIAGNOSIS FUNCTION "DEALER MODE" (Refer to page 31 ~ 40 [4-1-14 ~ 23]) carefully to have good understanding as to what functions are available and how to use it.

Be sure to read "PRECAUTIONS for Electrical Circuit Service" (Refer to page 18 [4-1-1]) before inspection and observe what is written there.

GV650 PRO D spec

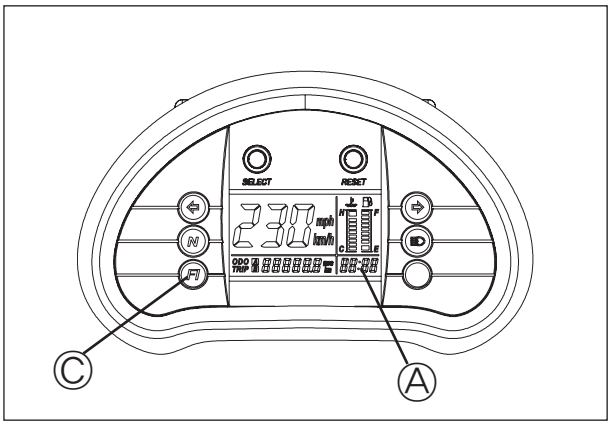

GT650 PEi D spec & GT650 Ei D spec

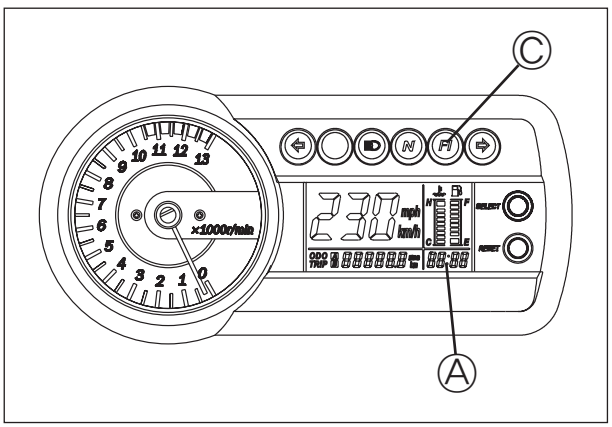

GT650 REi D spec & GT650 SEi D spec

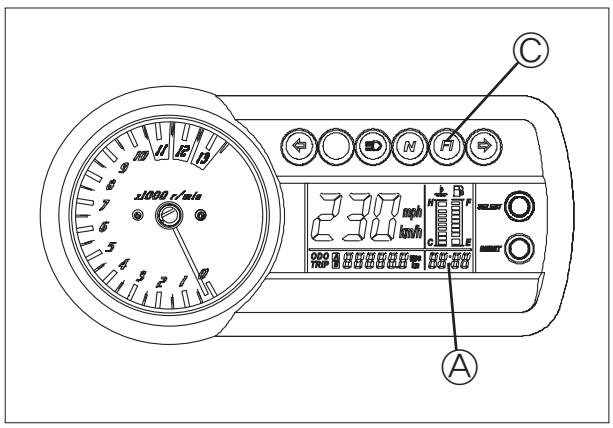

■ LCD (DISPLAY) INDICATION

Refer to page 31 [4-1-14]

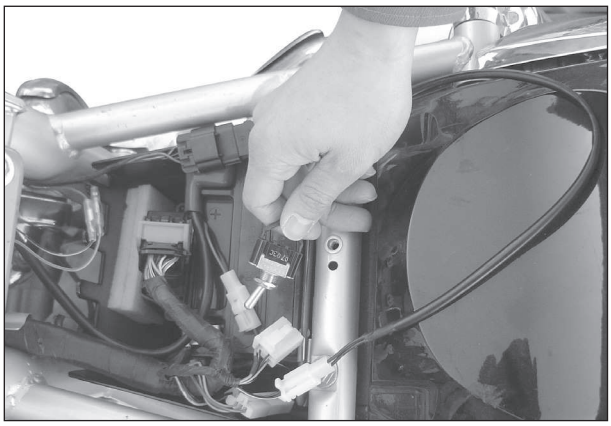

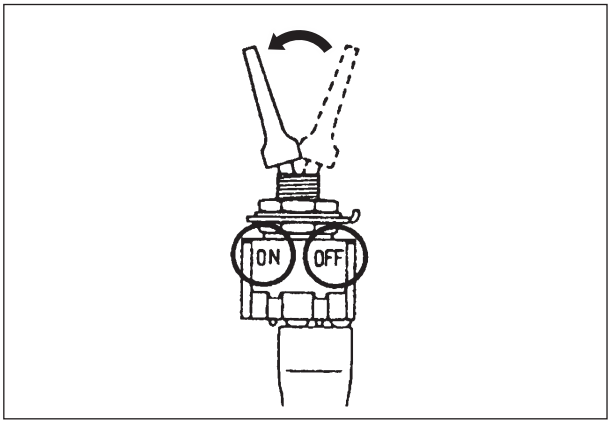

■ "FI" CHECK LAMP INDICATION

Refer to page 34 [4-1-17]

GV650 PRO D spec

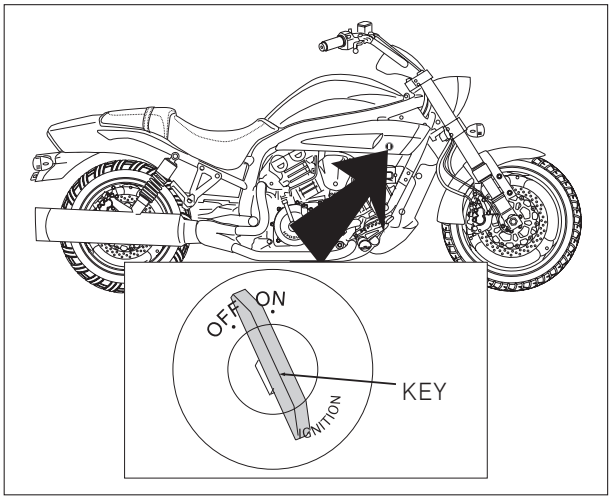

GT650P EI D spec &
GT650 EI D spec

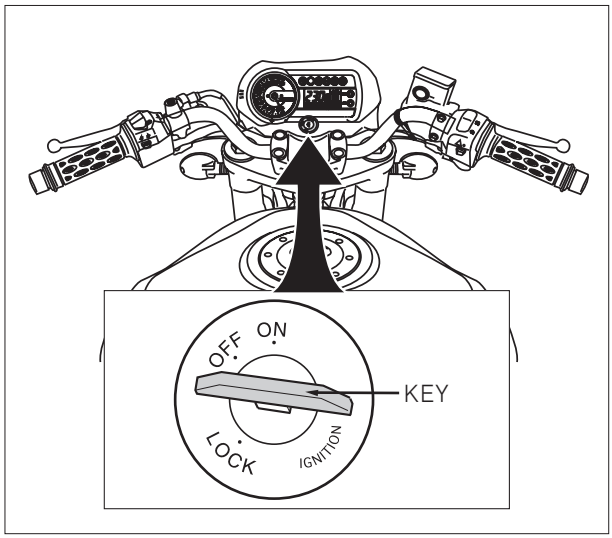

GT650R EI D spec &
GT650S EI D spec

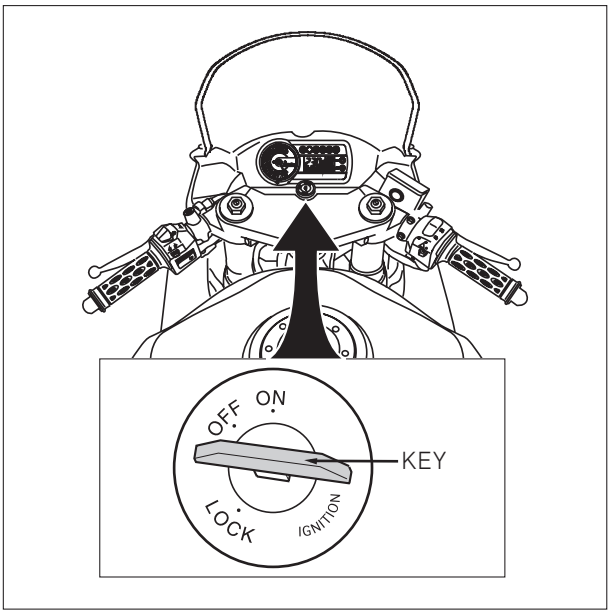

SELF-DIAGNOSIS RESET PROCEDURE

■ LCD (DISPLAY) PANEL Ⓐ

- After repairing the trouble, refer to page 31 [4-1-14], move to 『the malfunction code mode』.
- If the clock screen Ⓐ indicates the “noEr” letters, the malfunction codes are cleared.
- Disconnect the special tool from the dealer mode coupler at the wiring harness.

GV650 PRO D spec

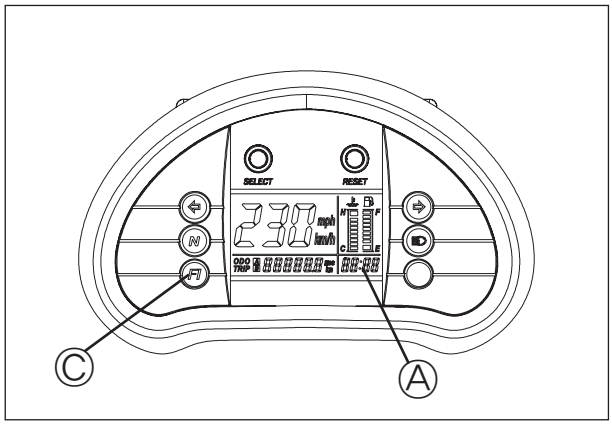

GT650 PEi D spec & GT650 Ei D spec

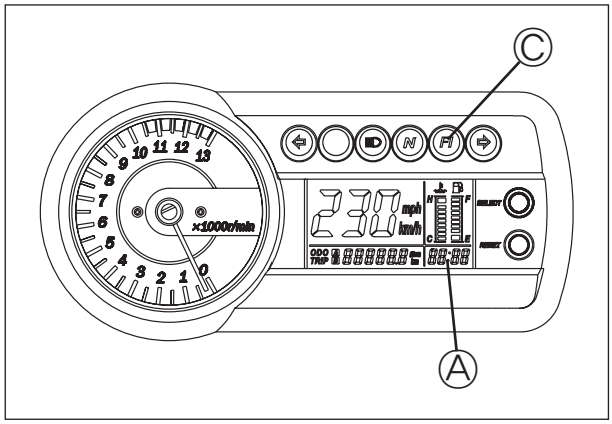

GT650 REi D spec & GT650 SEi D spec

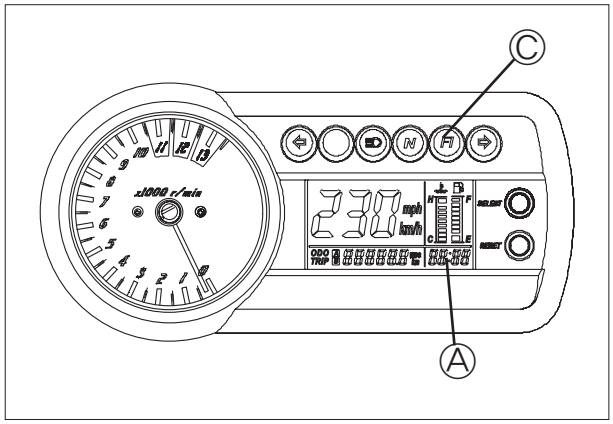

■ "FI" CHECK LAMP ©

- Repair the trouble.
  Turn the ignition switch to the "OFF" position and return to the "ON" position, and then wait for 10 seconds.
  Repeat the above procedure 30 times.
  In this case, the malfunction codes are cleared.

GV650 PRO D spec

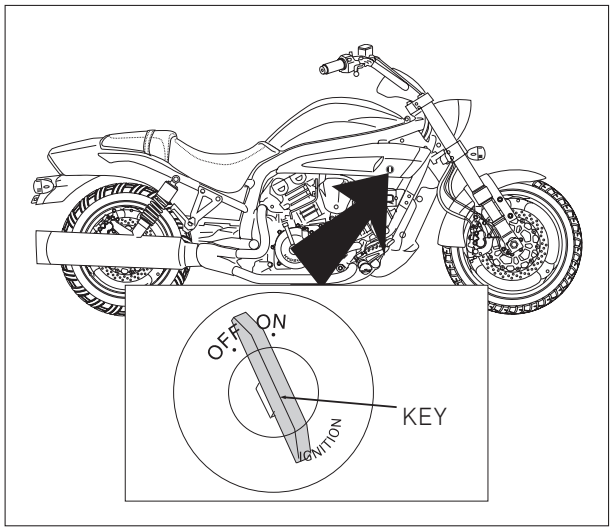

GT650 PEi D spec & GT650 EiD spec

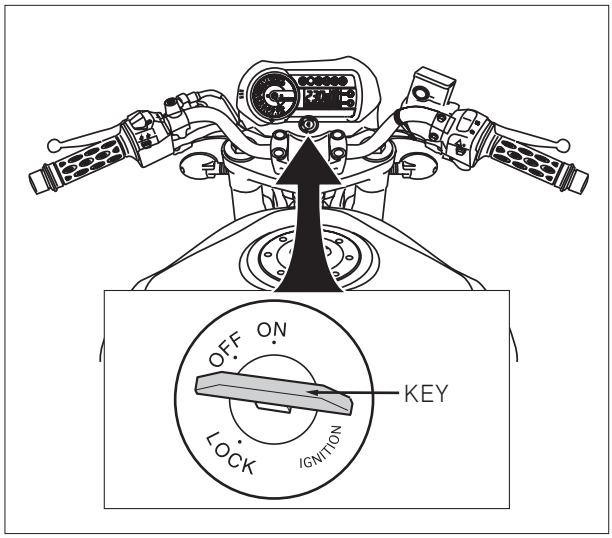

GT650 REi D spec & GT650 SEi D spec

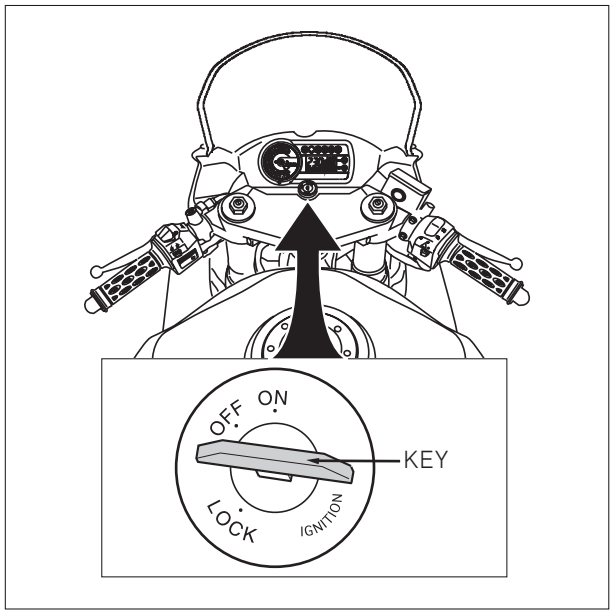

MALFUNCTION CODE AND DEFECTIVE CONDITION

MALFUNCTION CODE	DETECTED ITEM		DETECTED FAILURE CONDITION CHECK FOR
noEr	NO FAULT		—
0031	NO.1 O_2 S heater Circuit	Low Voltage	After engine running, if oxygen sensor heater signal open or is happened the ground short fault for 1 second by 10 times in 12 times test cycle, the code 0031 is indicated.
			Oxygen sensor, lead wire / coupler connection.
0032		High Voltage	After engine running, if oxygen sensor heater signal is happened the high short fault for 1 second by 10 times in 12 times test cycle, the code 0032 is indicated.
			Oxygen sensor, lead wire / coupler connection.
0037	NO.2 O_2 S heater Circuit	Low Voltage	After engine running, if oxygen sensor heater signal open or is happened the ground short fault for 1 second by 10 times in 12 times test cycle, the code 0037 is indicated.
			Oxygen sensor, lead wire / coupler connection.
0038		High Voltage	After engine running, if oxygen sensor heater signal is happened the high short fault for 1 second by 10 times in 12 times test cycle, the code 0038 is indicated.
			Oxygen sensor, lead wire / coupler connection.
0107	IAPS Circuit	Low Voltage or Open	The sensor should produce following voltage. 0.15 V $\leqq$ Sensor output voltage Without the above range for 2.2 sec. and more, 0107 is indicated.
			Intake air pressure sensor, lead wire / coupler connection.
0108		High Voltage	The sensor should produce following voltage. Sensor output voltage $\leqq$ 5 V Without the above range for 10.0 sec. and more, 0108 is indicated.
			Intake air pressure sensor, lead wire / coupler connection.
0112	IATS Circuit	Low Voltage	The sensor voltage should be the following. 0.1 V $\leqq$ Sensor output voltage Without the above range for 6.25 sec. and more, 0112 is indicated.
			Intake air temperature sensor, lead wire / coupler connection.
0113		High Voltage or Open	The sensor voltage should be the following. Sensor output voltage $\leqq$ 4.9 V Without the above range for 6.25 sec. and more, 0113 is indicated.
			Intake air temperature sensor, lead wire / coupler connection.

MALFUNCTION CODE	DETECTED ITEM		DETECTED FAILURE CONDITION CHECK FOR
0117	WTS Circuit	Low Voltage	The sensor voltage should be the following. 0.1 V ≦ Sensor output voltage Without the above range for 6.25 sec. and more, 0117 is indicated.
			Water temperature sensor, lead wire / coupler connection.
0118		High Voltage or Open	The sensor voltage should be the following. Sensor output voltage ≦ 5 V Without the above range for 6.25 sec. and more, 0118 is indicated.
			Water temperature sensor, lead wire / coupler connection.
0122	TPS Circuit	Low Voltage or Open	The sensor should produce following voltage. 0.2 V ≦ Sensor output voltage Without the above range for 7.8 sec. and more, 0122 is indicated.
			Throttle position sensor, lead wire / coupler connection.
0123		High Voltage	The sensor should produce following voltage. Sensor output voltage ≦ 4.9 V Without the above range for 7.8 sec. and more, 0123 is indicated.
			Throttle position sensor, lead wire / coupler connection.
0131	NO.1 O_2 S Circuit	Low Voltage	After engine running, the oxygen sensor signal is inputted in ECU since then 300 sec. In this case, the sensor voltage should be the following. 30 mV ≦ Sensor output voltage Without the above range for 28.1 sec. and more, 0131 is indicated.
			Oxygen sensor, lead wire / coupler connection.
0132		High Voltage	After engine running, the oxygen sensor signal is inputted in ECU since then 300 sec. In this case, the sensor voltage should be the following. Sensor output voltage ≦ 1.0 V Without the above range for 29.4 sec. and more, 0132 is indicated.
			Oxygen sensor, lead wire / coupler connection.
0137	NO.2 O_2 S Circuit	Low Voltage	After engine running, the oxygen sensor signal is inputted in ECU since then 300 sec. In this case, the sensor voltage should be the following. 30 mV ≦ Sensor output voltage Without the above range for 28.1 sec. and more, 0137 is indicated.
			Oxygen sensor, lead wire / coupler connection.
0138		High Voltage	After engine running, the oxygen sensor signal is inputted in ECU since then 300 sec. In this case, the sensor voltage should be the following. Sensor output voltage ≦ 1.0 V Without the above range for 29.4 sec. and more, 0138 is indicated.
			Oxygen sensor, lead wire / coupler connection.

MALFUNCTION CODE	DETECTED ITEM		DETECTED FAILURE CONDITION CHECK FOR
0201	NO.1 Fuel Injector Circuit Malfunction		After engine running, if NO.1 fuel injector signal open or is happened the high / ground short fault for 1 second by 5 times in 10 times test cycle, the code 0201 is indicated.
			Injector, wiring / coupler connection, power supply to the injector.
0202	NO.2 Fuel Injector Circuit Malfunction		After engine running, if NO.2 fuel injector signal open or is happened the high / ground short fault for 1second by 5 times in 10 times test cycle, the code 0202 is indicated.
			Injector, wiring / coupler connection, power supply to the injector.
0230	Fuel pump relay Circuit	Low Voltage or Open	After engine running, if fuel pump relay signal open or is happened the ground short fault for 1 second by 10 times in 20 times test cycle, the code 0230 is indicated.
			Fuel pump relay, connecting lead wire, power source to fuel pump relay, fuel injector.
0232		High Voltage	After engine running, if fuel pump relay signal is happened the high short fault for 1 second by 10 times in 20 times test cycle, the code 0232 is indicated.
			Fuel pump relay, connecting lead wire, power source to fuel pump relay, fuel injector.
0336	Pick-up coil	Noisy Signal	After engine running, if the magneto rotor tooth's error is happened continuously by 10 times in 100 times test cycle, the code 0336 is indicated.
			Pick-up coil wiring and mechanical parts. (Pick-up coil, lead wire coupler connection)
0337		No Signal	After engine running, if the pick-up coil signal does not reach ECU for more than 0.5 sec., the code 0337 is indicated.
			Pick-up coil wiring and mechanical parts. (Pick-up coil, lead wire coupler connection)
0351	NO.1 IG coil Malfunction		After engine running, if NO.1 ignition coil signal open or is happened the high / ground short fault for 1 second by 5 times in 10 times test cycle, the code 0351 is indicated.
			Ignition coil, wiring / coupler connection, power supply from the battery.
0352	NO.2 IG coil Malfunction		After engine running, if NO.2 ignition coil signal open or is happened the high / ground short fault for 1 second by 5 times in 10 times test cycle, the code 0352 is indicated.
			Ignition coil, wiring / coupler connection, power supply from the battery.

MALFUNCTION CODE	DETECTED ITEM		DETECTED FAILURE CONDITION CHECK FOR
0500	Speedo sensor Malfunction		Motorcycle speed ＜ 10 km/h Water temperature ＜ 20 ℃ IAPS pressure ＞ 40 kPa 20% ＜ TPS open angle ＜ 100% 2,000 rpm ＜ Engine speed ＜ 6,000 rpm If the above conditions are maintained for more than 1 second, the code 0500 is indicated.
			Speedo sensor, wiring / coupler connection to ECU.
0505	ISC Error		After engine running, if idle speed is different to 500 rpm from the specified range in 25 seconds test cycle, the code 0505 is indicated.
			Idle speed control solenoid, wiring / coupler connection.
0562	Battery Voltage	Low	The battery voltage should be the following. 9 V ≦ Battery voltage Without the above range for 3.125 sec. and more, 0562 is indicated.
			Battery, wiring / coupler connection to ECU.
0563		High	The battery voltage should be the following. Battery voltage ≦ 16 V Without the above range for 3.125 sec. and more, 0563 is indicated.
			Battery, wiring / coupler connection to ECU.
0650	“FI” check lamp Circuit Malfunction		After engine running, if “FI” check lamp signal open or is happened the high / ground short fault for 1 second by 40 times in 80 times test cycle, the code 0650 is indicated.
			“FI” check lamp, wiring / coupler connection.
0850	GP or Clutch lever Switch Circuit Malfunction		If gear position or clutch lever switch signal feedback is not active in continuous by 20 times in fully power down cycles, the code 0850 is indicated. (Fully power down cycle : Ignition switch “ON” → “OFF” position)
			Gear position or clutch lever switch, wiring / coupler connection, gearshift cam etc.

"0031", "0032", "0037" or "0038" OXYGEN SENSOR HEATER CIRCUIT MALFUNCTION & "0131", "0132", "0137" or "0138" OXYGEN SENSOR CIRCUIT MALFUNCTION

LCD (DISPLAY) INDICATION	"FI" CHECK LAMP INDICATION
0031	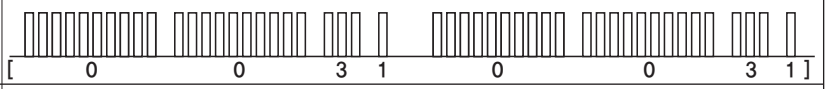
0032	
0037	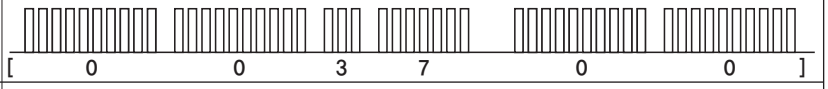
0038	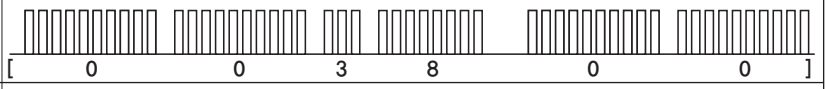
0131	
0132	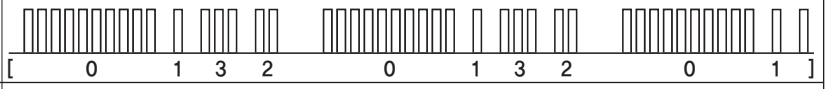
0137	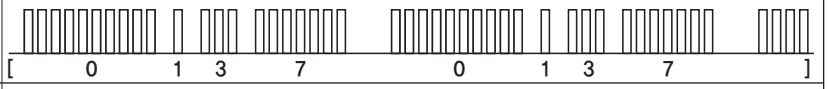
0138	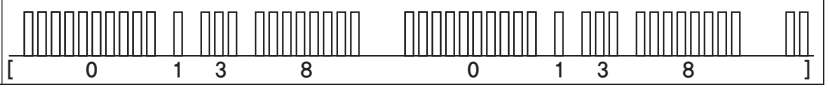

DETECTED CONDITION	POSSIBLE CAUSE
☞ **Refer to page 48, 49 [4-1-31, 32]**	● Oxygen sensor, Oxygen sensor heater circuit open or short. ● Oxygen sensor, Oxygen sensor heater malfunction. ● ECU malfunction.

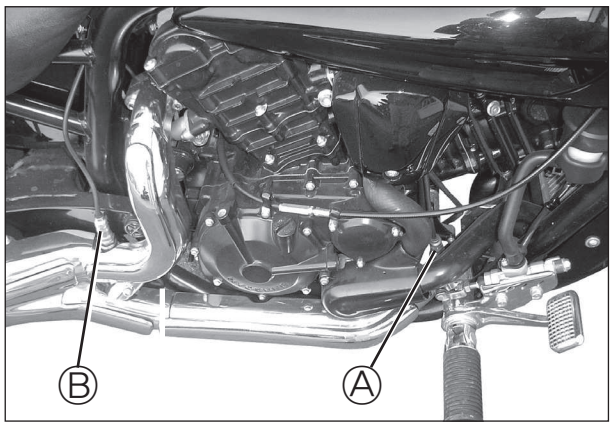

※ Ⓐ : NO.1 O_2S
Ⓑ : NO.2 O_2S

■ INSPECTION

1) Remove the front seat and frame cover.
2) Turn the ignition switch to the “OFF” position.
3) Check the Oxygen sensor coupler for loose or poor contacts.

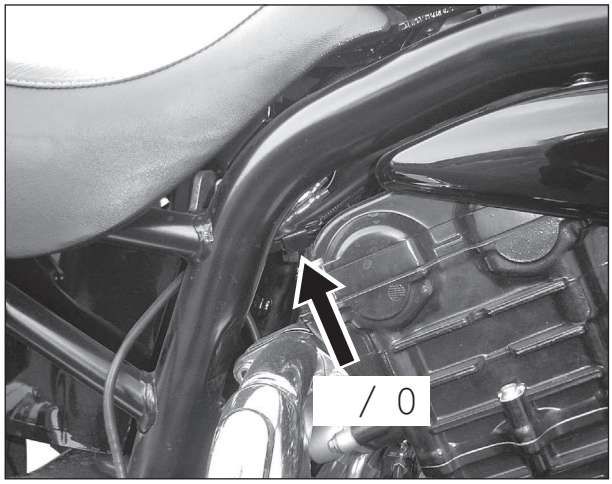

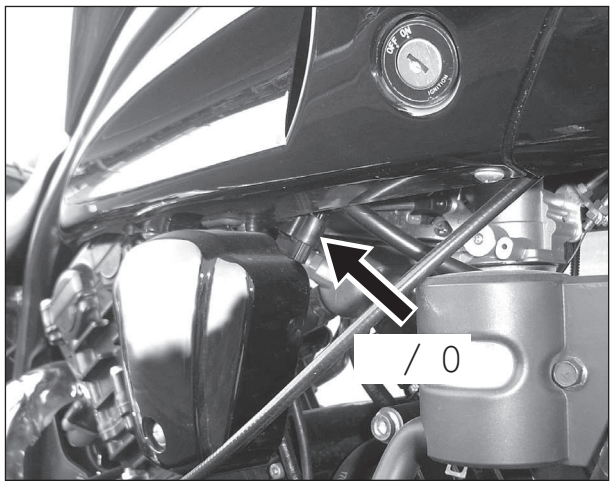

Is OK?

YES	● B or GR (NO.1 O_2 S) / R or GR (NO.2 O_2 S) wire open or shorted to ground, or poor Ⓑ17 or Ⓑ10 (NO.1 O_2 S) / Ⓖ5 or Ⓑ10 (NO.2 O_2 S) connection of ECU coupler. [Sensor side] W (NO.1 O_2 S heater) / L (NO.2 O_2 S heater) wire open or shorted to ground, or poor Ⓑ7 (NO.1 O_2 S heater) / Ⓖ4 (NO.2 O_2 S heater) connection of ECU coupler. YL coupler open or shorted to the wiring harness (main relay output side). [Heater side] If wire and connection are OK, intermittent trouble or faulty ECU. Recheck each terminal and wire harness for open circuit and poor connection.
NO	Replace the Oxygen sensor with a new one.

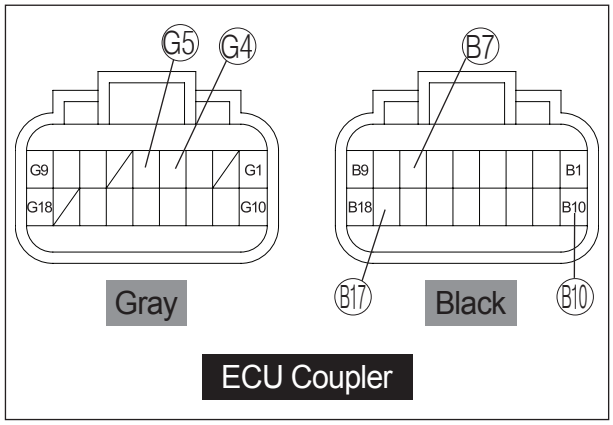

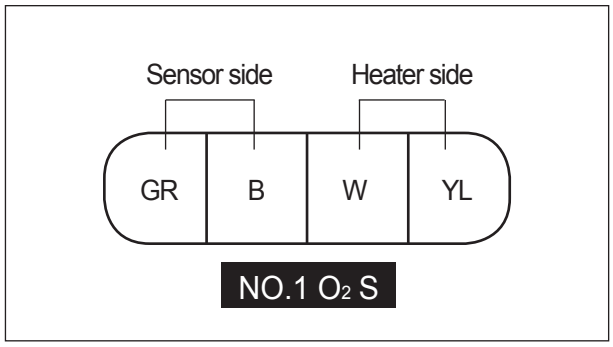

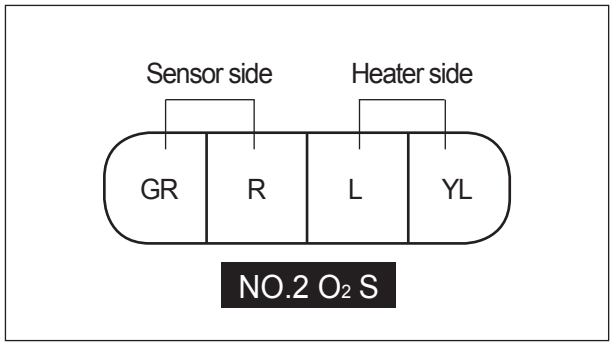

"0107" or "0108" IAP SENSOR CIRCUIT MALFUNCTION

LCD (DISPLAY) INDICATION	"FI" CHECK LAMP INDICATION
0107	[0 1 0 7 0 1 0]
0108	[0 1 0 8 0 1 0]

DETECTED CONDITION	POSSIBLE CAUSE
☞ **Refer to page 48 [4-1-31]** *NOTE :* *Note that atmospheric pressure varies depending on weather conditions as well as altitude.* *Take that into consideration when inspecting voltage.*	● Clogged vacuum passage between throttle body and IAP sensor. ● Air being drawn from vacuum passage between throttle body and IAP sensor. ● IAP sensor circuit open or shorted to ground. ● IAP sensor malfunction. ● ECU malfunction.

■ INSPECTION

◈ Step 1

1) Remove the fuel tank.
2) Turn the ignition switch to the "OFF" position.
3) Check the IAP sensor coupler ① for loose or poor contacts.
   If OK, then measure the IAP sensor input voltage.

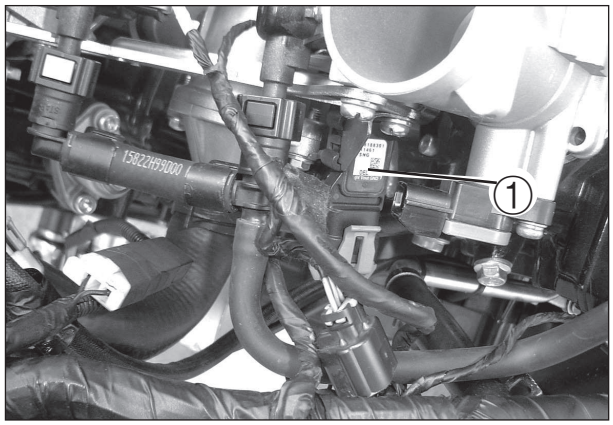

4) Disconnect the IAP sensor coupler ②.
5) Turn the ignition switch to the "ON" position.
6) Measure the input voltage at the OB wire and ground.
   If OK, then measure the input voltage at the OB wire and GR wire.

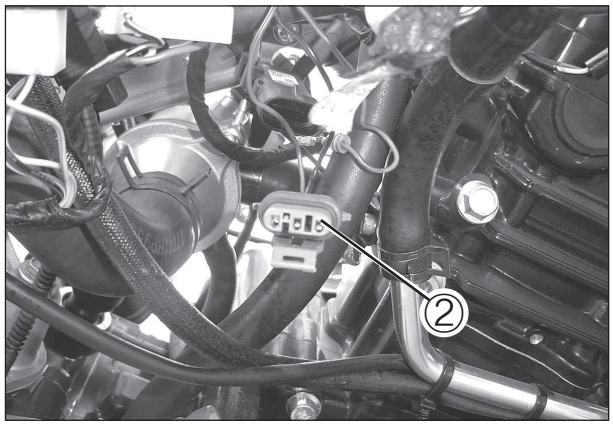

IAP sensor input voltage	4.5 ~ 5.5 V (⊕ OB — ⊖ Ground) (⊕ OB — ⊖ GR)

Tester knob indication : Voltage (⎓)

Is the input voltage OK?

YES	Go to Step 2.
NO	● Loose or poor contacts on the ECU coupler. ● Open or short circuit in the OB wire or GR wire.

◈ Step 2

1) Connect the IAP sensor coupler ①.
2) Insert the needle pointed probes to the lead wire coupler.
3) Turn the ignition switch to the "ON" position.
4) Measure the IAP sensor output voltage at the wire side coupler (between BL and GR wires).

IAP sensor output voltage	Approx. 2.7 V at idle speed (⊕ BL — ⊖ GR)

Tester knob indication : Voltage (⎓)

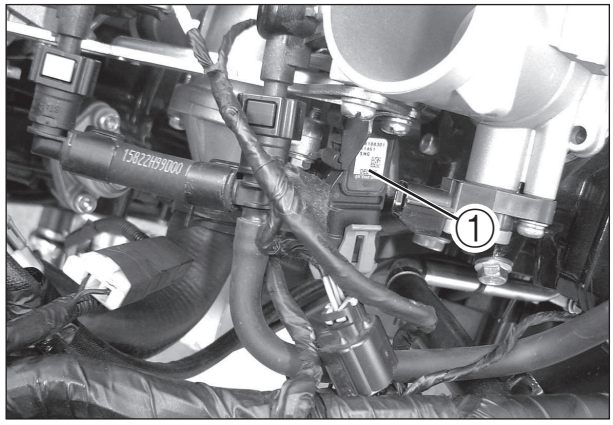

Is the output voltage OK?

YES	● OB, BL or GR wire open or shorted to ground, or poor (B16), (B11) or (B10) connection of ECU coupler. ● If wire and connection are OK, intermittent trouble or faulty ECU. ● Recheck each terminal and wire harness for open circuit and poor connection.
NO	If check result is not satisfactory, replace the IAP sensor with a new one.

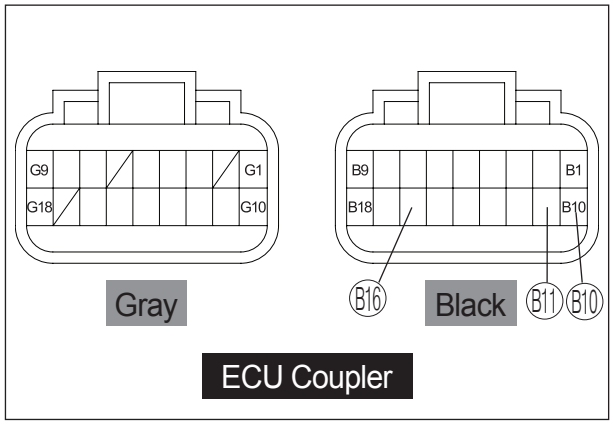

Output voltage (Input voltage 5 V, ambient temp. 25 °C, 77 °F)

ALTITUDE (Reference)		ATMOSPHERIC PRESSURE		OUTPUT VOLTAGE
(ft)	(m)	(mmHg)	kPa	(V)
0 | 2 000	0 | 610	760 | 707	100 | 94	Approx. 3.7 ~ 3.9
2 001 | 5 000	611 | 1 524	707 | 634	94 | 85	Approx. 3.3 ~ 3.7
5 001 | 8 000	1 525 | 2 438	634 | 567	85 | 76	Approx. 3.0 ~ 3.3
8 001 | 10 000	2 439 | 3 048	567 | 526	76 | 70	Approx. 2.7 ~ 3.0

“0112” or “0113” IAT SENSOR CIRCUIT MALFUNCTION

LCD (DISPLAY) INDICATION	“FI” CHECK LAMP INDICATION
	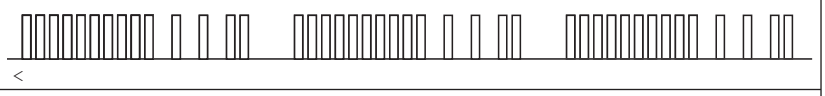

DETECTED CONDITION	POSSIBLE CAUSE
☞ **Refer to page 48 [4-1-31]**	● IAT sensor circuit open or short. ● IAT sensor malfunction. ● ECU malfunction.

■ INSPECTION

1) Remove the fuel tank.
2) Turn the ignition switch to the “OFF” position.
3) Check the IAT sensor coupler for loose or poor contacts.
   If OK, then measure the IAT sensor resistance.

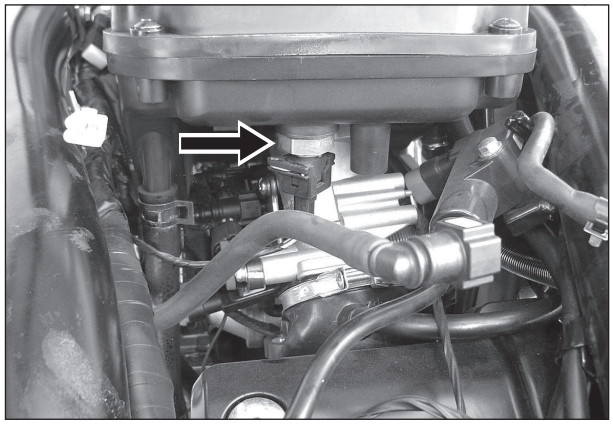

4) Disconnect the IAT sensor coupler.
5) Measure the resistance between the terminals ① and ②.

IAT sensor resistance	0.081 ~ 48.352 [When Intake air temperature is −40℃ ~ 130℃ (−40˚F ~ 266˚F)]

Tester knob indication : Resistance (KΩ)

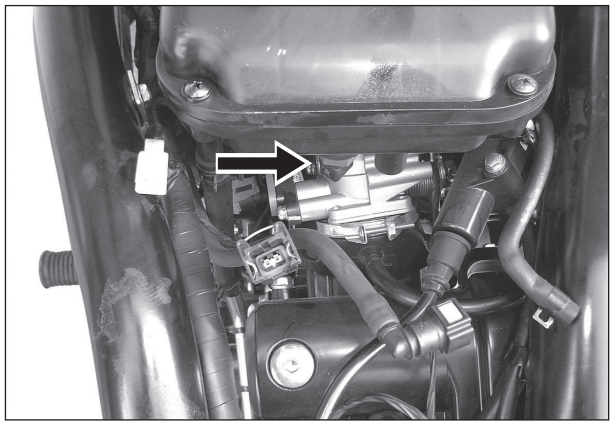

NOTE

IAT sensor resistance measurement method is the same way as that of the WT sensor.

Refer to the service manual “Aquilas” (99000−51210) page 5-7

Refer to the service manual “Centaro” (99000−94810) page 5-7

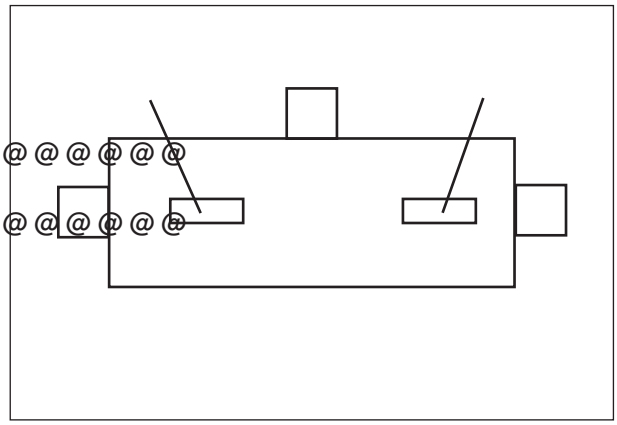

IAT sensor resistance	
Intake Air Temp.	**Resistance**
–40 ℃ (–40 ℉)	44.642 KΩ ± 5%
–20 ℃ (–4 ℉)	14.958 KΩ ± 5%
0 ℃ (32 ℉)	5.734 KΩ ± 5%
20 ℃ (68 ℉)	2.438 KΩ ± 5%
40 ℃ (104 ℉)	1.141 KΩ ± 5%
60 ℃ (140 ℉)	0.579 KΩ ± 5%
80 ℃ (176 ℉)	0.315 KΩ ± 5%
100 ℃ (212 ℉)	0.182 KΩ ± 5%
120 ℃ (248 ℉)	0.111 KΩ ± 5%
130 ℃ (266 ℉)	0.088 KΩ ± 5%

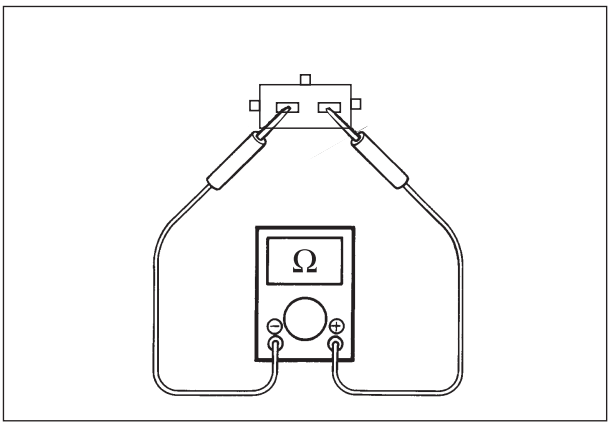

Tester knob indication : Resistance (KΩ)

Is the resistance OK?

YES	● Lg or GR wire open or shorted to ground, or poor B8 or B10 connection of ECU coupler. ● If wire and connection are OK, intermittent trouble or faulty ECU. ● Recheck each terminal and wire harness for open circuit and poor connection.
NO	Replace the IAT sensor with a new one.

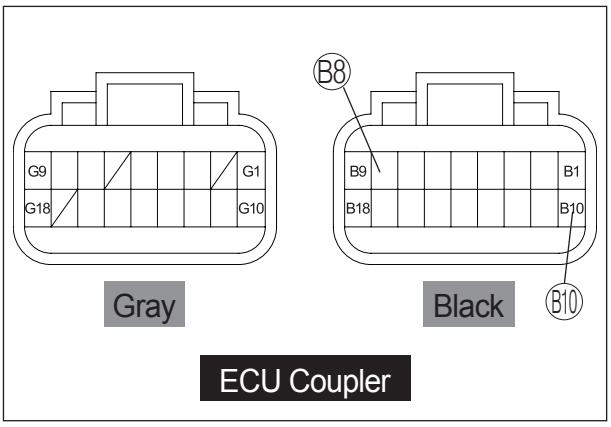

"0117" or "0118" WT SENSOR CIRCUIT MALFUNCTION

LCD (DISPLAY) INDICATION	"FI" CHECK LAMP INDICATION
0117	[0 1 1 7 0 1 1 7]
0118	[0 1 1 8 0 1 1 8]

DETECTED CONDITION	POSSIBLE CAUSE
☞ **Refer to page 49 [4-1-32]**	● WT sensor circuit open or short. ● WT sensor malfunction. ● ECU malfunction.

■ INSPECTION

1) Turn the ignition switch "OFF" position.
2) Check the WT sensor coupler for loose or poor contacts.
   If OK, then measure the WT sensor resistance.
   ☞ Refer to the service manual 『Aquilla 650 (99000-51210)』 page 5-7
   ☞ Refer to the service manual 『Comet 650 (99000-94810)』 page 5-7

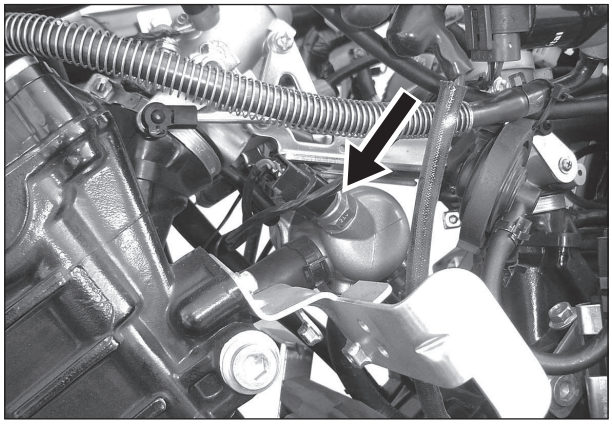

3) Disconnect the WT sensor coupler.
4) Measure the resistance between the terminals ① and ③.

WT sensor resistance	0.1163 ~ 48.1400 KΩ [When Water temperature is -40℃ ~ 120℃ (-40℉ ~ 248℉)]

Tester knob indication : Resistance (KΩ)

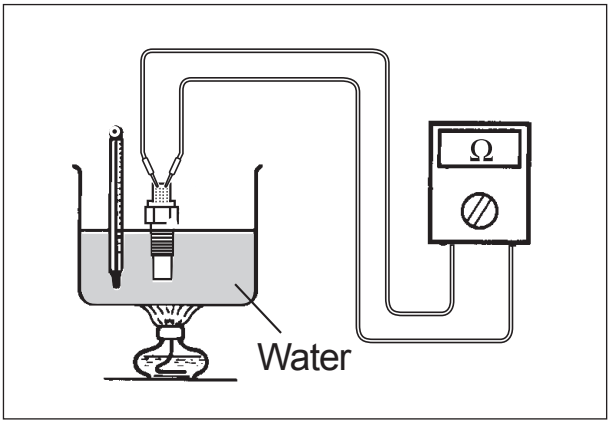

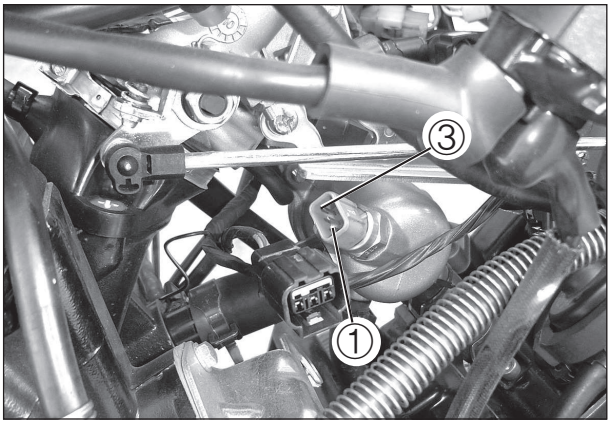

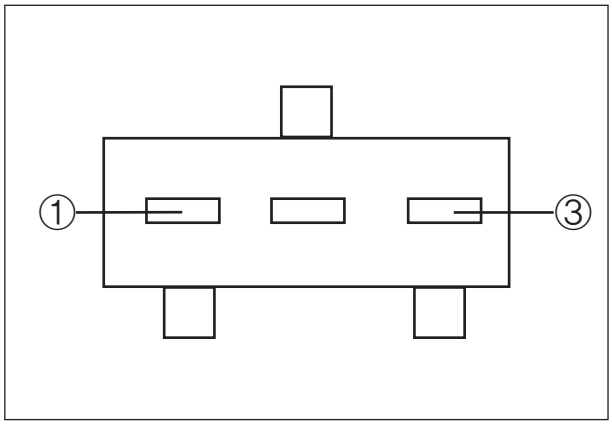

WT sensor resistance	
Engine Coolant Temp.	**Resistance (To ECU)**
–40 ℃ (–40 ℉)	Approx. 48.140 KΩ
0 ℃ (32 ℉)	Approx. 5.790 KΩ
20 ℃ (68 ℉)	Approx. 2.450 KΩ
40 ℃ (104 ℉)	Approx. 1.148 KΩ
60 ℃ (140 ℉)	Approx. 0.586 KΩ
80 ℃ (176 ℉)	Approx. 0.322 KΩ
120 ℃ (248 ℉)	Approx. 0.1163 KΩ

Tester knob indication : Resistance (KΩ)

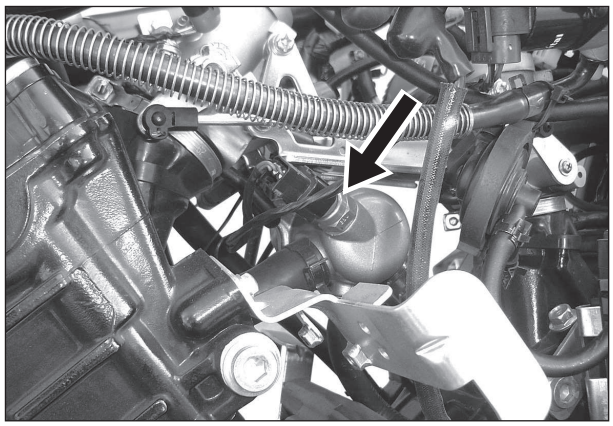

Is the resistance OK?

YES	● G or GR wire open or shorted to ground, or poor B14 or B10 connection of ECU coupler. ● If wire and connection are OK, intermittent trouble or faulty ECU. ● Recheck each terminal and wire harness for open circuit and poor connection.
NO	Replace the WT sensor with a new one.

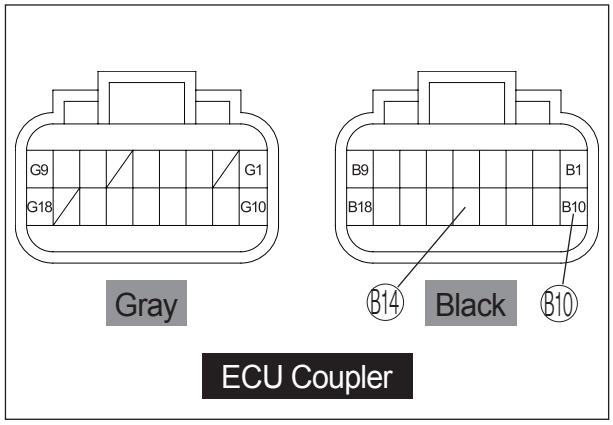

"0122" or "0123" TP SENSOR CIRCUIT MALFUNCTION

LCD (DISPLAY) INDICATION	"FI" CHECK LAMP INDICATION
0122	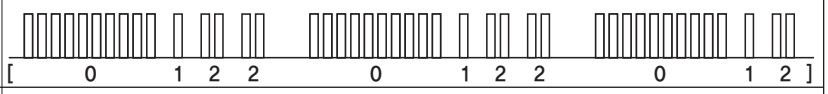
0123	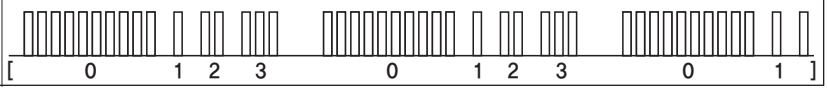

DETECTED CONDITION	POSSIBLE CAUSE
☞ **Refer to page 49 [4-1-32]**	● TP sensor circuit open or short. ● TP sensor malfunction. ● ECU malfunction.

■ INSPECTION

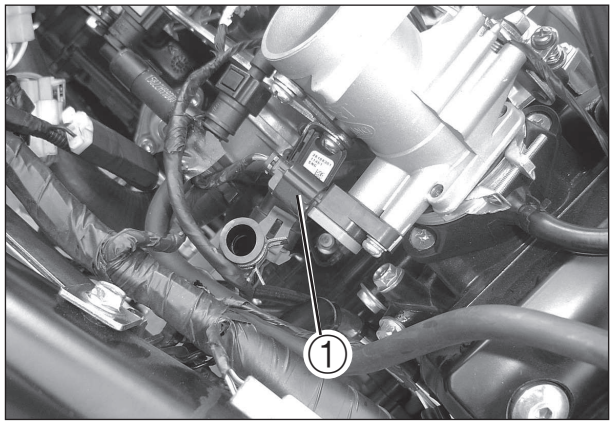

◈ Step 1

1) Turn the ignition switch to the "OFF" position.
2) Check the TP sensor coupler for loose or poor contacts.
   If OK, then measure the TP sensor input voltage.
3) Disconnect the TP sensor coupler ①.
4) Turn the ignition switch to the "ON" position.
5) Measure the voltage at the OB wire and ground.
6) If OK, then measure the voltage at the OB wire and GR wire.

TP sensor input voltage	4.9 ~ 5.1 V (⊕ OB — ⊖ Ground) (⊕ OB — ⊖ GR)

Tester knob indication : Voltage (⎓)

Is the input voltage OK?

YES	Go to Step 2.
NO	● Loose or poor contacts on the ECU coupler. ● Open or short circuit in the OB wire or GR wire.

◈ Step 2

1) Remove the frame cover.
2) Turn the ignition switch to the “OFF” position.
3) Disconnect the TP sensor coupler.
4) Check the continuity between Ⓐ (LY) and ground.

TP sensor continuity	∞ Ω (Infinity) (Ⓐ - Ground)

Tester knob indication : Resistance (Ω)

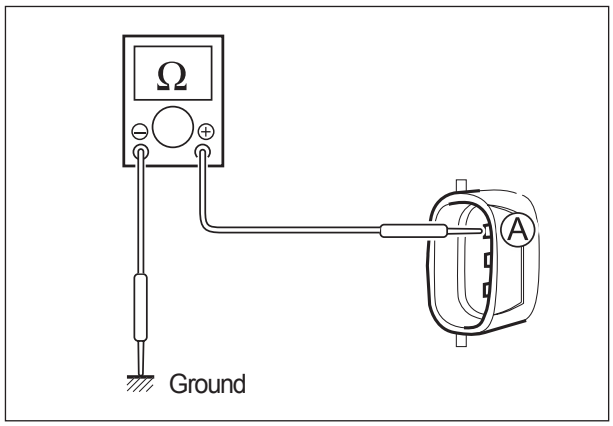

Is the continuity OK?

YES	Go to Step 3.
NO	Replace the TP sensor with a new one.

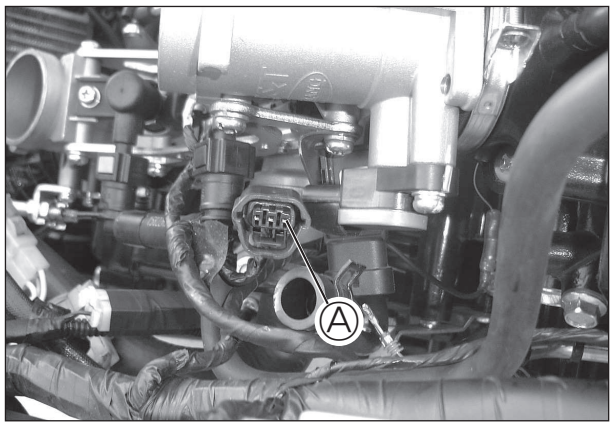

◈ Step 3

1) Connect the TP sensor coupler.
2) Insert the needle pointed probes to the lead wire coupler.
3) Turn the ignition switch to the “ON” position.
   Measure the TP sensor output voltage at the coupler [between Ⓐ (⊕ : LY) and Ⓒ (⊖ : GR)] by turning the throttle grip.

TP sensor output voltage	
Throttle valve is closed	Approx. 1.07 ~ 1.17 V
Throttle valve is opened	Approx. 4.30 ~ 4.70 V

Tester knob indication : Voltage (⎓)

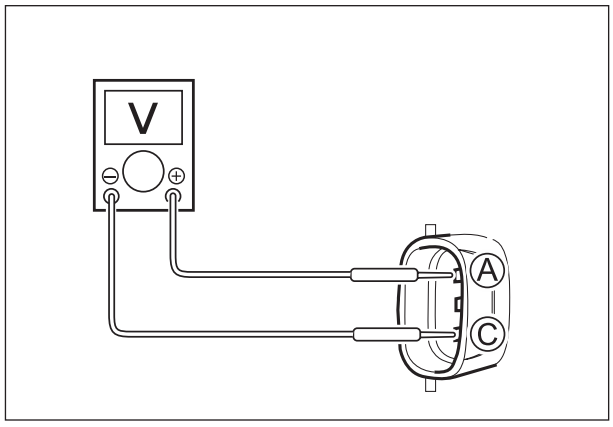

Is the output voltage OK?

YES	● OB, LY or GR wire open or shorted to ground, or poor (B16), (B12) or (B10) connection of ECU coupler. ● If wire and connection are OK, intermittent trouble or faulty ECU. ● Recheck each terminal and wire harness for open circuit and poor connection.
NO	If check result is not satisfactory, replace the TP sensor with a new one.

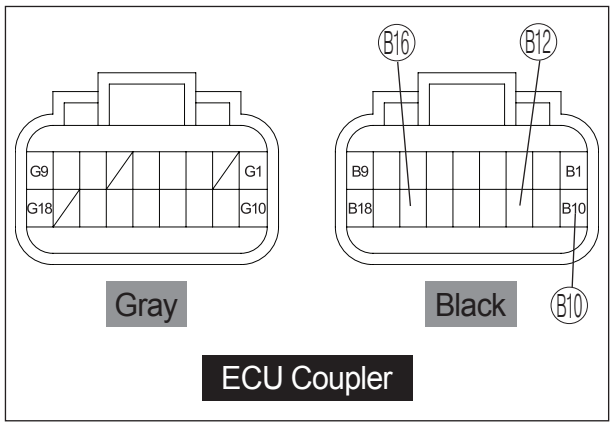

"0201" or "0202" FUEL INJECTOR CIRCUIT MALFUNCTION

LCD (DISPLAY) INDICATION	"FI" CHECK LAMP INDICATION
0201	[0 2 0 1 0 2 0 1]
0202	[0 2 0 2 0 2 0 2]

DETECTED CONDITION	POSSIBLE CAUSE
☞ **Refer to page 50 [4-1-33]**	● Injector circuit open or short. ● Injector malfunction. ● ECU malfunction.

■ INSPECTION

◈ Step 1

1) Remove the fuel tank and frame cover.
2) Turn the ignition switch to the "OFF" position.
3) Check the injector couplers NO.1 ① and NO.2 ② for loose or poor contacts.
   If OK, then measure the injector resistance.

※ Ⓐ : NO.1 FUEL INJECTOR (white taping)
Ⓑ : NO.2 FUEL INJECTOR

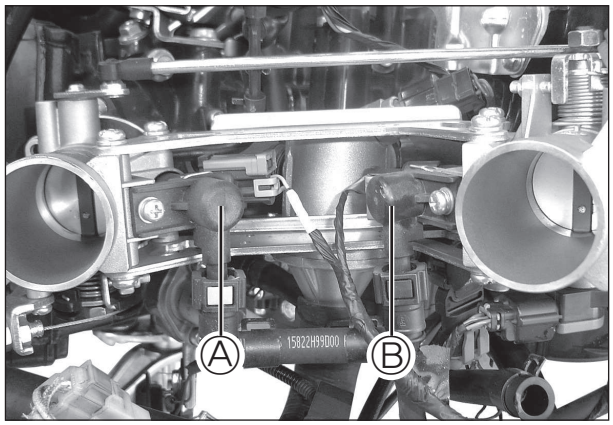

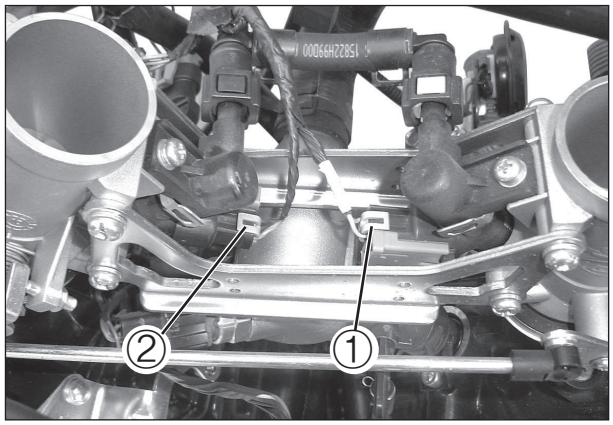

4) Disconnect the injector couplers NO.1 ① and NO.2 ② and measure the resistance between terminals.

Injector resistance	11.4 ~ 12.6 Ω at 20℃ (68℉)

Tester knob indication : Resistance (Ω)

5) If OK, then check the continuity between injector terminals and ground.

Injector continuity	∞ Ω (Infinity)

Tester knob indication : Resistance (Ω)

Are the resistance and continuity OK?

YES	Go to Step 2
NO	Replace the Injector with a new one.

◈ Step 2

1) Turn the ignition switch to the “ON” position.
2) Measure the injector voltage between YL(NO.1 & NO.2) wire and ground.

Injector voltage	Battery voltage ([NO.1] ⊕ YL – ⊖ Ground, [NO.2] ⊕ YL – ⊖ Ground)

Tester knob indication : Voltage (⎓)

NOTE
Injector voltage can be detected only 3 seconds after ignition switch is turned “ON” position.

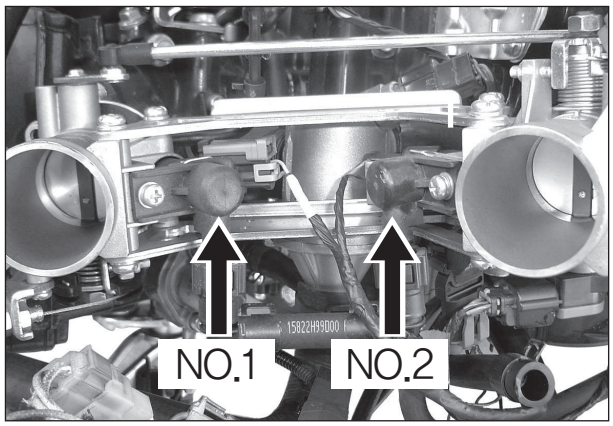

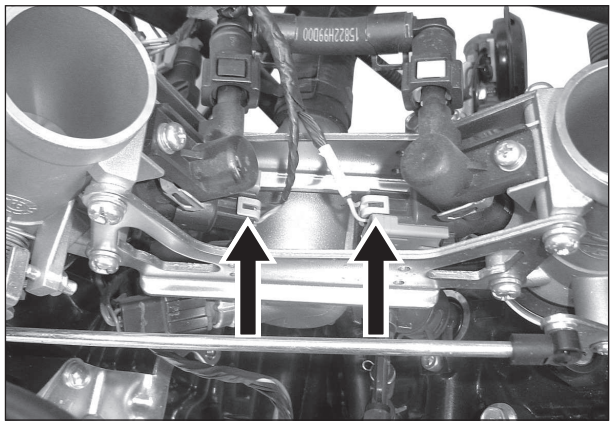

Is the voltage OK?

YES	● YR(NO.1), RB(NO.2) wire open or shorted to ground, or poor Ⓑ5 (NO.1), Ⓑ6 (NO.2) connection of ECU coupler. ● If wire and connection are OK, intermittent trouble or faulty ECU. ● Recheck each terminal and wire harness for open circuit and poor connection.
NO	Inspect the fuel pump or fuel pump relay. (Refer to page 82 [4-2-5])

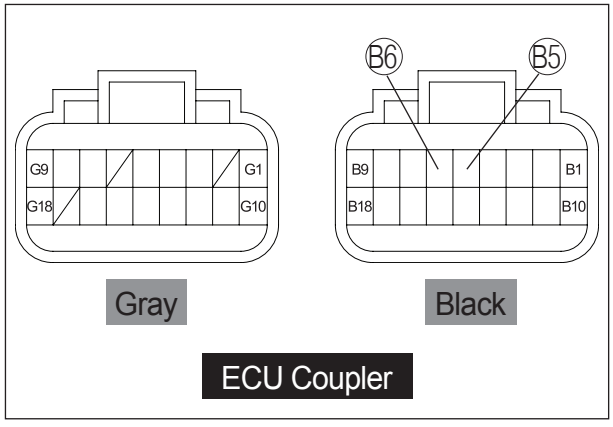

"0230" or "0232" FUEL PUMP RELAY CIRCUIT MALFUNCTION

LCD (DISPLAY) INDICATION	"FI" CHECK LAMP INDICATION
0230	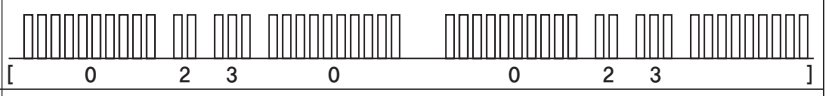
0232	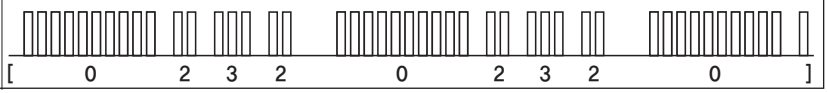

DETECTED CONDITION	POSSIBLE CAUSE
☞ **Refer to page 50 [4-1-33]**	● Fuel pump relay circuit open or short. ● Fuel pump relay malfunction. ● ECU malfunction.

■ INSPECTION

1) Remove the frame cover.
2) Turn the ignition switch to the "OFF" position.
3) Check the fuel pump relay coupler for loose or poor contacts.
   If OK, then check the insulation and continuity. Refer to page 82 [4-2-5] for details.

※ Ⓐ **: Side stand relay**
Ⓑ **: Main relay**
Ⓒ **: Fuel pump relay**
Ⓓ **: Turn signal relay**

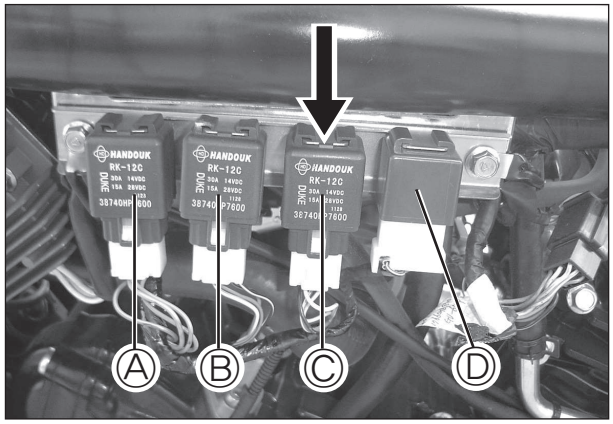

Is the Fuel pump relay OK?

YES	● GW wire open or shorted to ground, or poor (B9) connection of ECU coupler. ● If wire and connection are OK, intermittent trouble or faulty ECU. ● Recheck each terminal and wire harness for open circuit and poor connection. ● Inspect the fuel injectors. (Refer to page 63 [4-1-46])
NO	Replace the fuel pump relay with a new one.

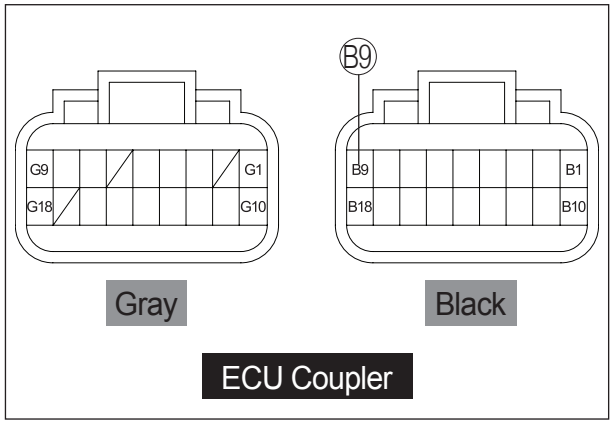

"0336" or "0337" PICK-UP COIL CIRCUIT MALFUNCTION

LCD (DISPLAY) INDICATION	"FI" CHECK LAMP INDICATION
0336	[0 3 3 6 0 3 3 6]
0337	[0 3 3 7 0 3 3 7]

DETECTED CONDITION	POSSIBLE CAUSE
☞ **Refer to page 50 [4-1-33]**	● Metal particles or foreign materiel being attached on the pick-up coil and rotor tip. ● Pick-up coil circuit open or short. ● Pick-up coil malfunction. ● ECU malfunction.

■ INSPECTION

1) Remove the frame cover.
2) Turn the ignition switch to the "OFF" position.
3) Check the pick-up coil coupler ① for loose or poor contacts.
   If OK, then measure the pick-up coil resistance.

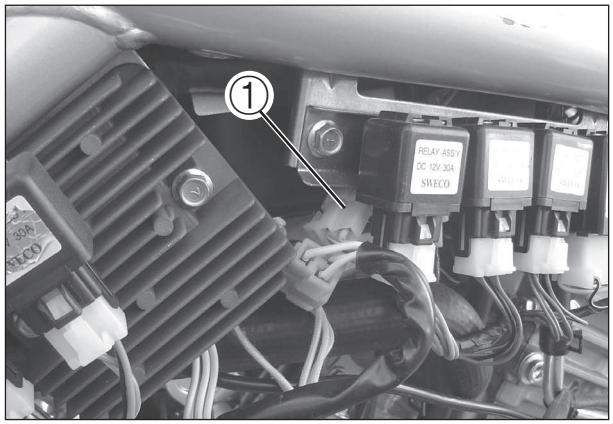

4) Disconnect the pick-up coil coupler ① and measure the resistance.

Pick-up coil resistance	110 ~ 140 Ω (G - L)

Tester knob indication : Resistance (Ω)

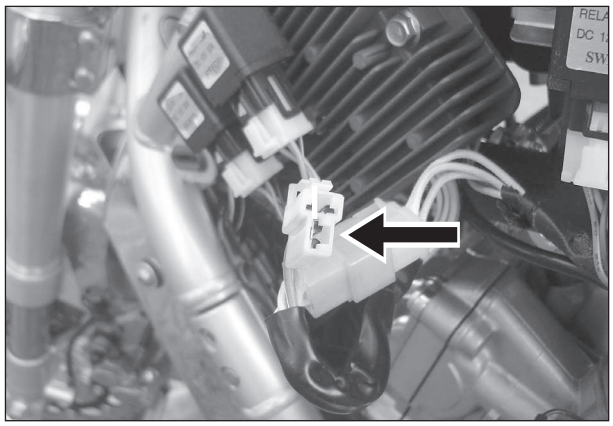

5) If OK, then check the continuity between each terminal and ground.

Pick-up coil continuity	∞ Ω (Infinity) (G – Ground) (L – Ground)

Tester knob indication : Resistance (Ω)

Are the resistance and continuity OK?

YES	● L or G wire open or shorted to ground, or poor (B13) or (B4) connection of ECU coupler. ● If wire and connection are OK, intermittent trouble or faulty ECU. ● Recheck each terminal and wire harness for open circuit and poor connection.
NO	● Loose or poor contacts on the pick-up coil coupler or ECU coupler. ● Replace the pick-up coil with a new one.

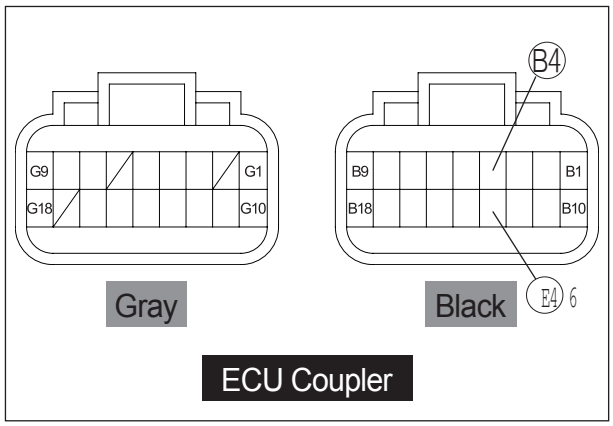

“0351” or “0352” IGNITION COIL MALFUNCTION

☞ Refer to the IGNITION COIL for details.
(See page 91 ~ 92 [6-4 ~ 5])

LCD (DISPLAY) INDICATION	“FI” CHECK LAMP INDICATION
0351	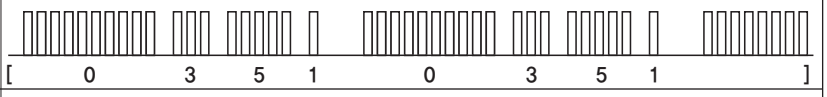
0352	

"0500" SPEEDO SENSOR MALFUNCTION

LCD (DISPLAY) INDICATION	"FI" CHECK LAMP INDICATION
0500	[0 5 0 0 0 5]

DETECTED CONDITION	POSSIBLE CAUSE
☞ **Refer to page 51 [4-1-34]**	● Speedo sensor circuit open and short. ● Speedo sensor malfunction. ● ECU malfunction.

■ INSPECTION

◈ Step 1

1) Driving the motorcycle and check the speedometer of the instrument panel for works.

Is the Speedometer OK?

YES	Go to step 2
NO	Replace the speedo sensor with a new on.

◈ Step 2

1) Check the continuity between G wire of the speedo sensor coupler (3 pins) ① and G15 of the ECU coupler.

Speedo sensor continuity	0 Ω

Tester knob indication : Resistance (Ω)

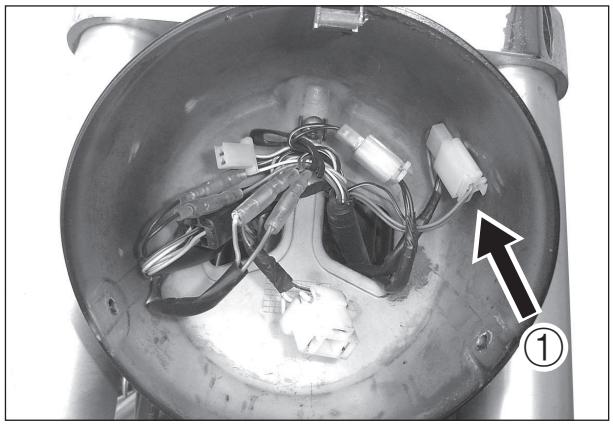

Is OK?

YES	● If wire and connection are OK, intermittent trouble or faulty ECU. ● Replace the speedo sensor or ECU with a new one.
NO	Recheck each terminal and wire harness for open circuit and poor connection.

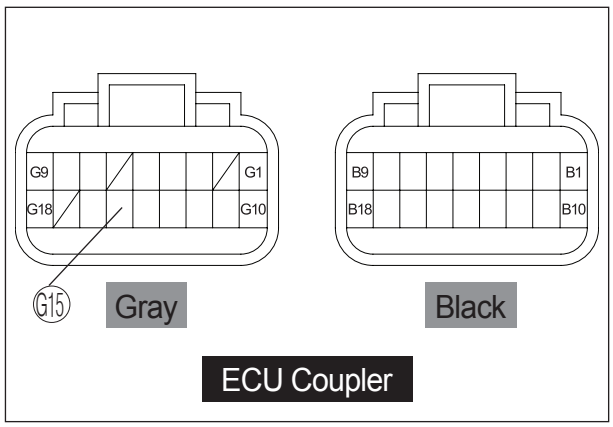

"0505" ISC SOLENOID RANGE ABNORMAL

LCD (DISPLAY) INDICATION	"FI" CHECK LAMP INDICATION
0505	[0 5 0 5 0 5]

DETECTED CONDITION	POSSIBLE CAUSE
☞ **Refer to page 51 [4-1-34]**	● ISC solenoid malfunction. ● ISC solenoid's step is out of the specified range. ● ECU malfunction.

■ INSPECTION

1) Remove the frame cover.
2) Turn the ignition switch to the "OFF" position.
3) Check the ISC solenoid coupler for loose or poor contacts.
4) Turn the ignition switch "ON" position to check the ISC solenoid operation.

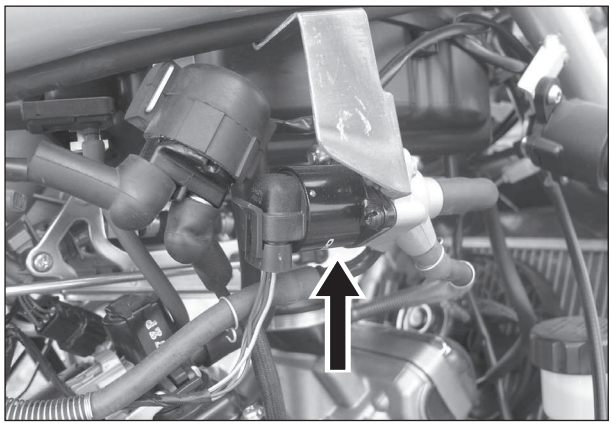

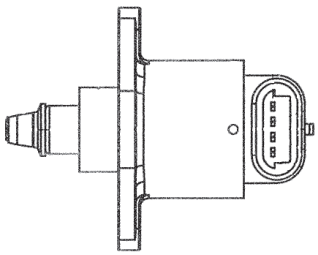

[When Ignition switch "OFF"]

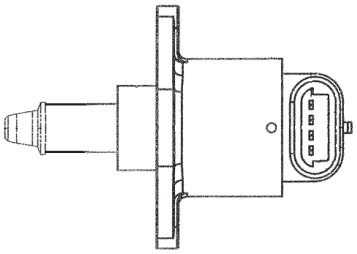

[When Ignition switch "ON"]

Is OK?

YES	● LY, G, BBr or YL wire loose or poor contacts on the ISC solenoid coupler, or poor G13, G12, G11 or G1 connection of ECU coupler. ● If wire and connection are OK, intermittent trouble or faulty ECU. ● Recheck each terminal and wire harness for open circuit and poor connection.
NO	Replace the ISC solenoid with a new one.

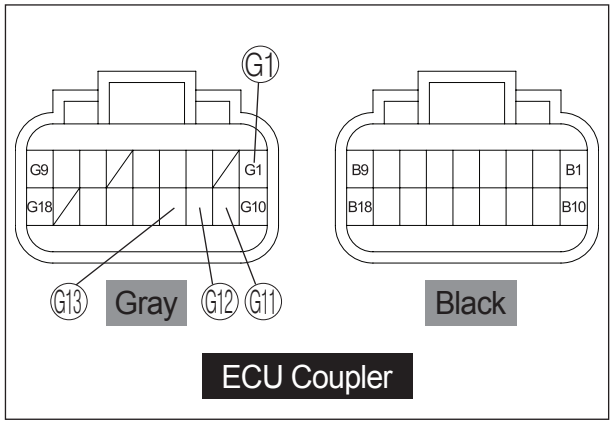

"0562" or "0563" BATTERY VOLTAGE MALFUNCTION

LCD (DISPLAY) INDICATION	"FI" CHECK LAMP INDICATION
0562	[0 5 6 2 0 5 6 2]
0563	[0 5 6 3 0 5 6 3]

DETECTED CONDITION	POSSIBLE CAUSE
☞ **Refer to page 51 [4-1-34]**	● Battery voltage circuit open and short. ● Battery malfunction. ● ECU malfunction.

■ INSPECTION

1) Remove the front seat.
2) Turn the ignition switch to the "OFF" position.
3) Using the pocket tester, measure the DC voltage between the battery (+) and (−) terminal.

Battery voltage	11 ~ 16 V

Tester knob indication : Voltage (⎓)

Is the battery voltage OK?

YES	● OB, BW, BW or RB wire open or shorted to ground, or poor Ⓑ15, Ⓖ9, Ⓑ2 or Ⓑ18 connection of ECU coupler. ● If wire and connection are OK, intermittent trouble or faulty ECU. ● Recheck each terminal and wire harness for open circuit and poor connection.
NO	Replace the battery with a new one.

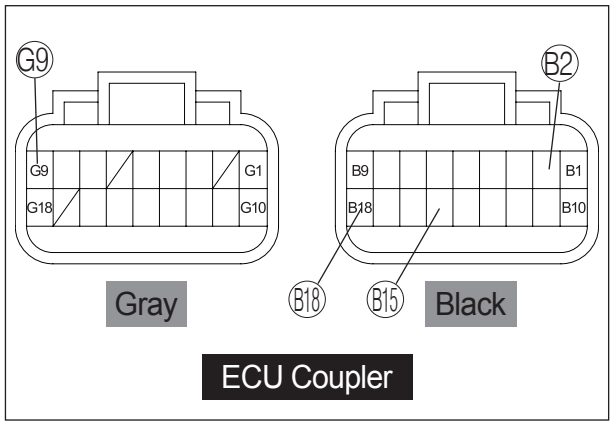

"0650" "FI" CHECK LAMP CIRCUIT MALFUNCTION

LCD (DISPLAY) INDICATION	"FI" CHECK LAMP INDICATION
0650	[0 6 5 0 0 6]

DETECTED CONDITION	POSSIBLE CAUSE
☞ **Refer to page 51 [4-1-34]**	● "FI" check lamp circuit open and short. ● "FI" check lamp malfunction. ● ECU malfunction.

■ INSPECTION

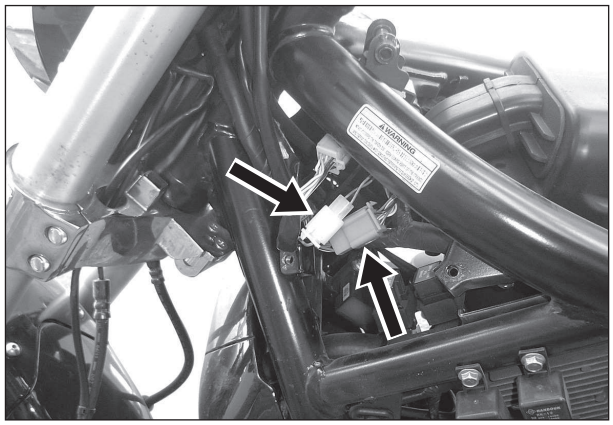

1) Remove the frame cover.
2) Turn the ignition switch to the "OFF" position.
3) Disconnect the instrument panel lead wires.

4-1) GV650 PRO D spec

Connect the battery ⊕ terminal to the O (9 pins coupler) wire of the instrument panel and the battery ⊖ terminal to the BW (9 pins coupler) wire of the instrument panel.
And then connect the LY (3 pins coupler) wire of the instrument panel to the battery ⊖ terminal directly.

4-2) GT650R EI D spec & GT650S EI D spec

Connect the battery ⊕ terminal to the R (9 pins coupler) wire and O (9 pins coupler) wire of the instrument panel and the battery ⊖ terminal to the BW (3 pins coupler) wire of the head lamp.
And then connect the LY (3 pins coupler) wire of the instrument panel to the battery ⊖ terminal directly.

4-3) GT650P EI D spec & GT650 EI D spec

Connect the battery ⊕ terminal to the R (4 pins coupler) wire and O (9 pins coupler) wire of the instrument panel and the battery ⊖ terminal to the BW (9 pins coupler) wire of the instrument panel.
And then connect the LY (4 pins coupler) wire of the instrument panel to the battery ⊖ terminal directly.

Is the "FI" check lamp lit?

YES	● LY or OB wire open or shorted to ground, or poor G3 or B15 connection of ECU coupler. ● If wire and connection are OK, intermittent trouble or faulty ECU. ● Recheck each terminal and wire harness for open circuit and poor connection.
NO	Replace the instrument panel with a new one.

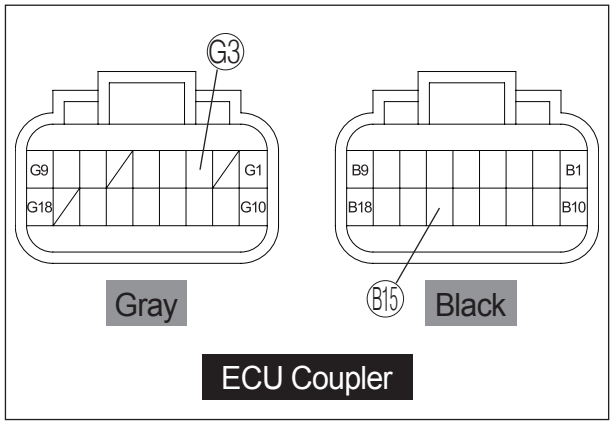

"0850" GP or CLUTCH LEVER SWITCH CIRCUIT MALFUNCTION

LCD (DISPLAY) INDICATION	"FI" CHECK LAMP INDICATION
0850	[0 8 5 0 0 8]

DETECTED CONDITION	POSSIBLE CAUSE
☞ **Refer to page 51 [4-1-34]**	● GP switch circuit open or short. ● GP switch malfunction. ● Clutch lever switch circuit open or short. ● Clutch lever switch malfunction. ● ECU malfunction.

■ INSPECTION

1) Remove the frame cover.
2) Turn the ignition switch to the "OFF" position.
3) Check the GP switch and clutch lever switch coupler for loose or poor contacts.
   If OK, then measure the GP switch and the clutch lever switch resistance.

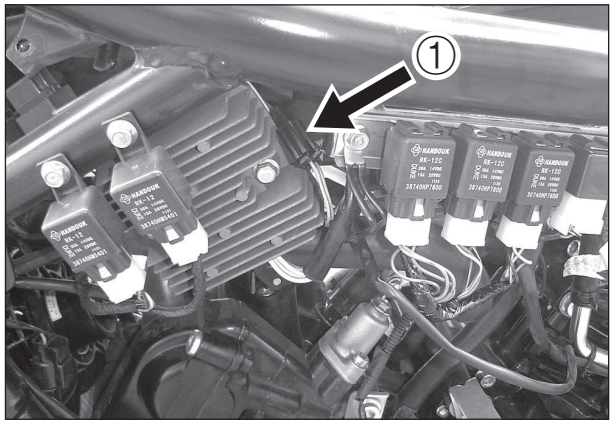

4) Park the motorcycle on a firm, flat surface vertically.
5) Disconnect the GP switch coupler ① and then check the continuity between L wire and ground when gearshift lever is shifted from the neutral state.

GP switch continuity	0 Ω (L ─ Ground)

Tester knob indication : Resistance (Ω)

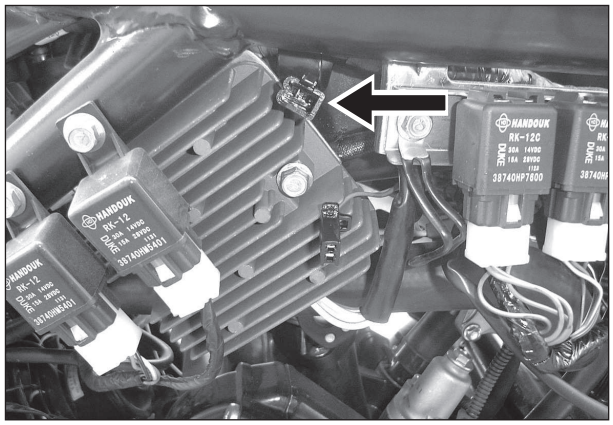

6) Disconnect the clutch lever switch coupler ② and then check the continuity between GR wire and Br wire when the squeezing the clutch lever.

Clutch lever switch continuity	0 Ω (GR – Br)

Tester knob indication : Resistance (Ω)

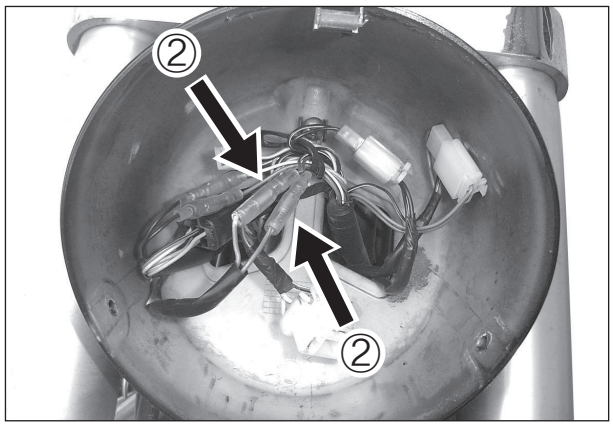

7) Measure the voltage between G18 of the ECU and the LY wire of the wiring harness's GP switch coupler, and measure the voltage between G18 of the ECU and the GR wire of the wiring harness's clutch lever switch coupler.
If the measurement is out of 0.4 ~ 0.7 V, replacce the DIODE #3 with a new one

Tester knob indication : Diode test (⊣←)

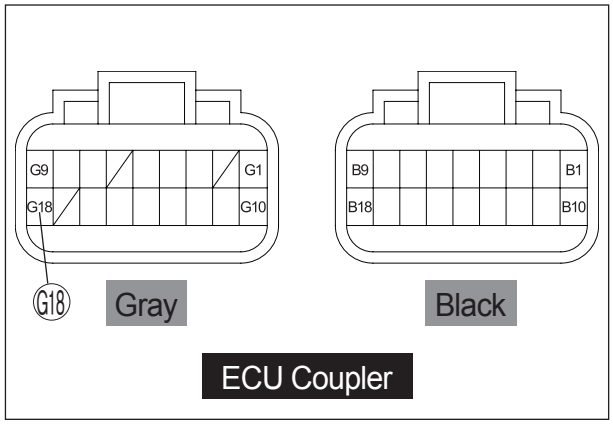

Is OK?

YES	● If wire and connection are OK, intermittent trouble or faulty ECU. ● Recheck each terminal and wire harness for open circuit and poor connection.
NO	Replace the GP switch or Clutch lever switch with a new one.

SENSORS

⊙ PICK-UP COIL INSPECTION

The pick-up coil ① is installed in the magneto cover.
(Refer to page 66 [4-1-49])

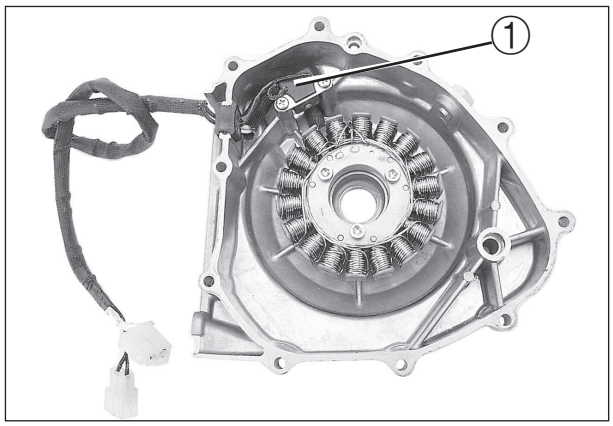

⊙ PICK-UP COIL REMOVAL AND INSTALLATION

- Remove the magneto cover.
- Install the magneto cover in the reverse order of removal.

⊙ IAP SENSOR INSPECTION

The intake air pressure (IAP) sensor ② is installed on the left side of the throttle body.
(Refer to page 54 [4-1-37])

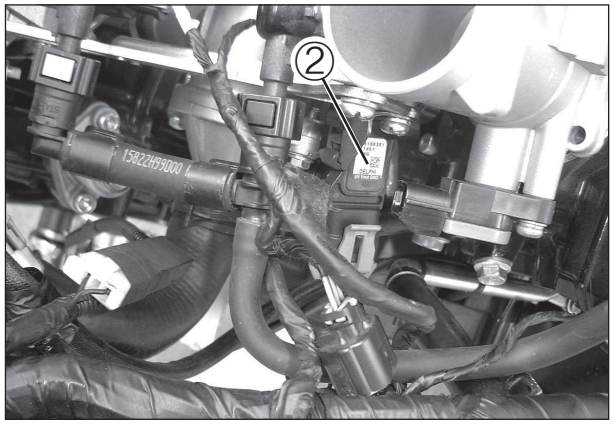

⊙ IAP SENSOR REMOVAL AND INSTALLATION

- Remove the fuel tank.
- Remove the IAP sensor from the left side of the throttle body.
- Install the IAP sensor in the reverse order of removal.

⊙ TP SENSOR INSPECTION

The throttle position (TP) sensor ③ is installed on the left side of the throttle body.
(Refer to page 60 [4-1-43])

⊙ TP SENSOR REMOVAL AND INSTALLATION

⚠ CAUTION
Never remove or adjust the TP sensor.

⦿ WT SENSOR INSPECTION

The water temperature (WT) sensor ① is installed on the rear side of the thermostat case.
(Refer to page 58 [4-1-41])

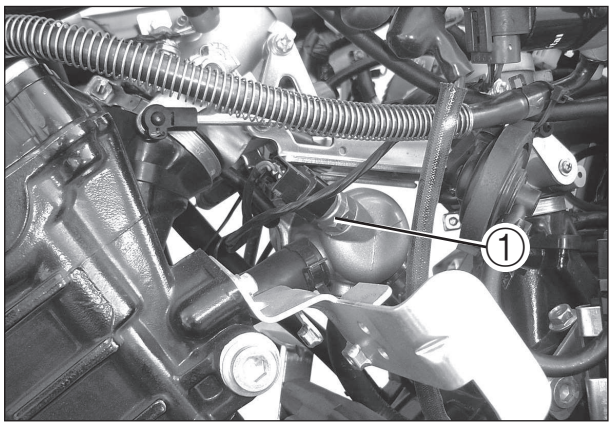

⦿ WT SENSOR REMOVAL AND INSTALLATION

- Remove the WT sensor.
- Install the WT sensor in the reverse order of removal.

WT sensor : 5 ~ 8 N · m (0.5 ~ 0.8 kgf · m)

⦿ IAT SENSOR INSPECTION

The intake air temperature (IAT) sensor ② is installed under the air cleaner case.
(Refer to page 56 [4-1-39])

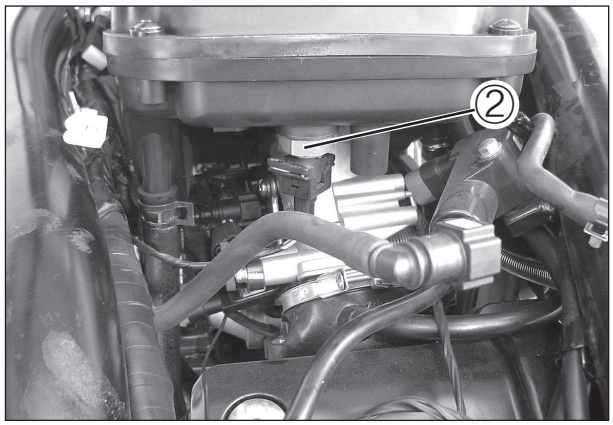

⦿ IAT SENSOR REMOVAL AND INSTALLATION

- Remove the fuel tank.
- Remove the IAT sensor from the air cleaner case.
- Install the IAT sensor in the reverse order of removal.

⦿RO SWITCH REMOVAL AND INSTALLATION

The roll over (RO) switch ③ is located below the fuel tank mounting bolts.

- Romove the front seat.
- Remove the RO switch from the frame.
- Install the RO switch in the reverse order of removal.

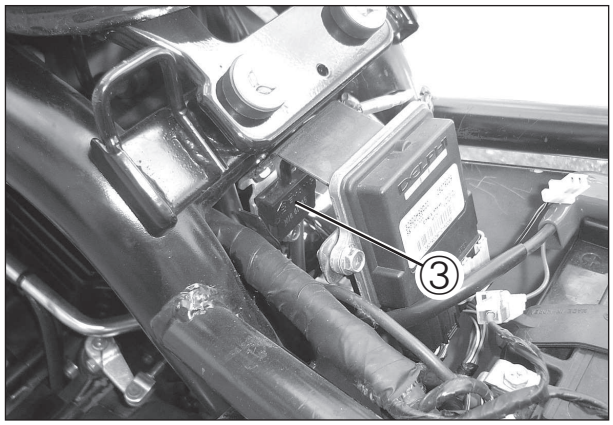

FUEL SYSTEM AND THROTTLE BODY

CONTENTS

FUEL SYSTEM ..... 78 [4-2-1]
REMOVAL AND DISASSEMBLY ..... 80 [4-2-3]
REASSEMBLY AND INSTALLATION ..... 81 [4-2-4]
FUEL PRESSURE OF FUEL PUMP INSPECTION ..... 82 [4-2-5]
FUEL PUMP RELAY INSPECTION ..... 82 [4-2-5]
FUEL MESH FILTER INSPECTION AND CLEANING ..... 83 [4-2-6]
FUEL GAUGE INSPECTION ..... 83 [4-2-6]
THROTTLE BODY ..... 84 [4-2-7]
REMOVAL ..... 85 [4-2-8]
CLEANING ..... 86 [4-2-9]
INSPECTION ..... 86 [4-2-9]
INSTALLATION ..... 86 [4-2-9]

⚠ CAUTION

Gasoline must be handled carefully in an area well ventilated and away from fire or spark.

FUEL SYSTEM

GV650 PRO D spec

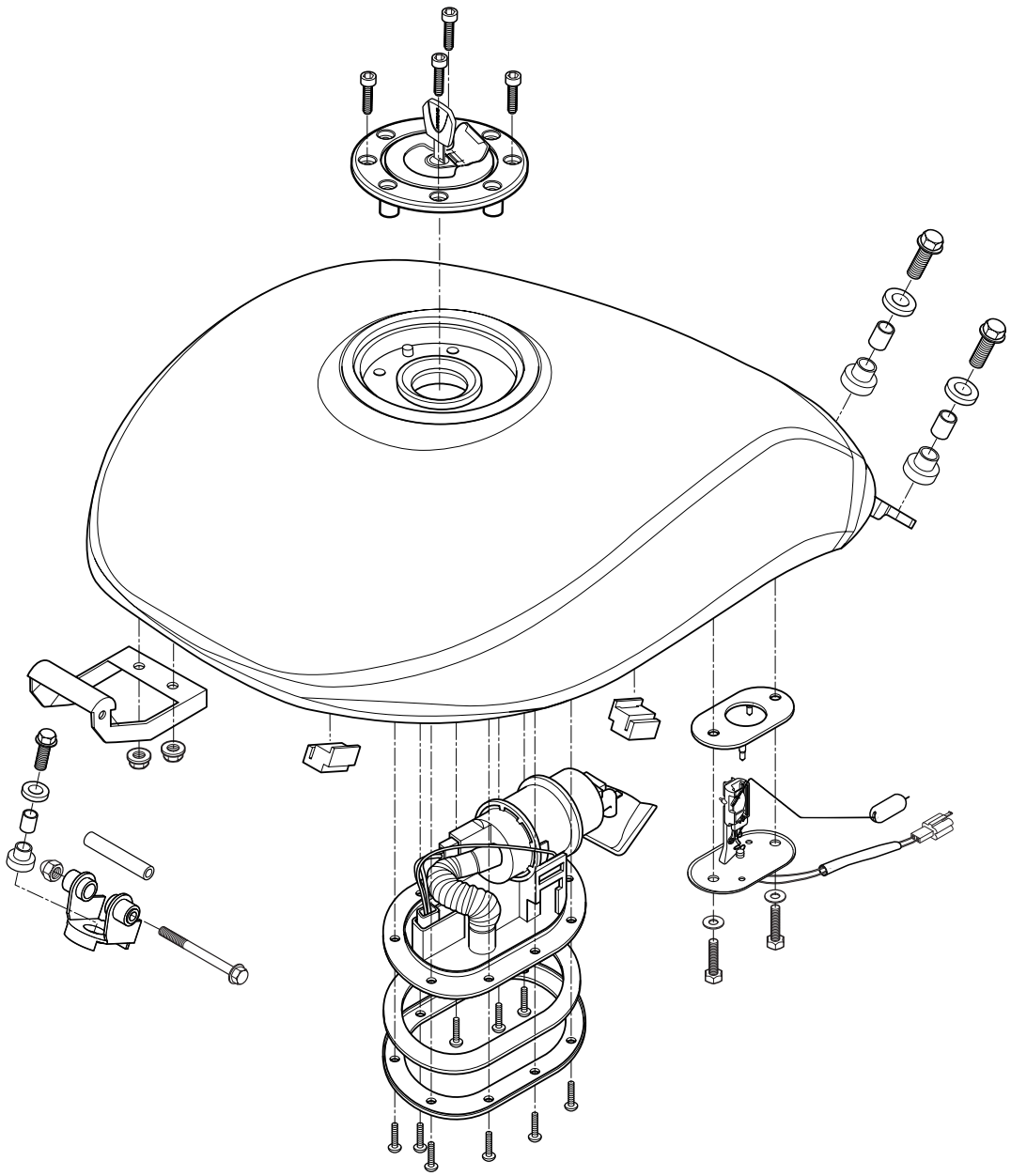

GT650I/P/S/REi D spec

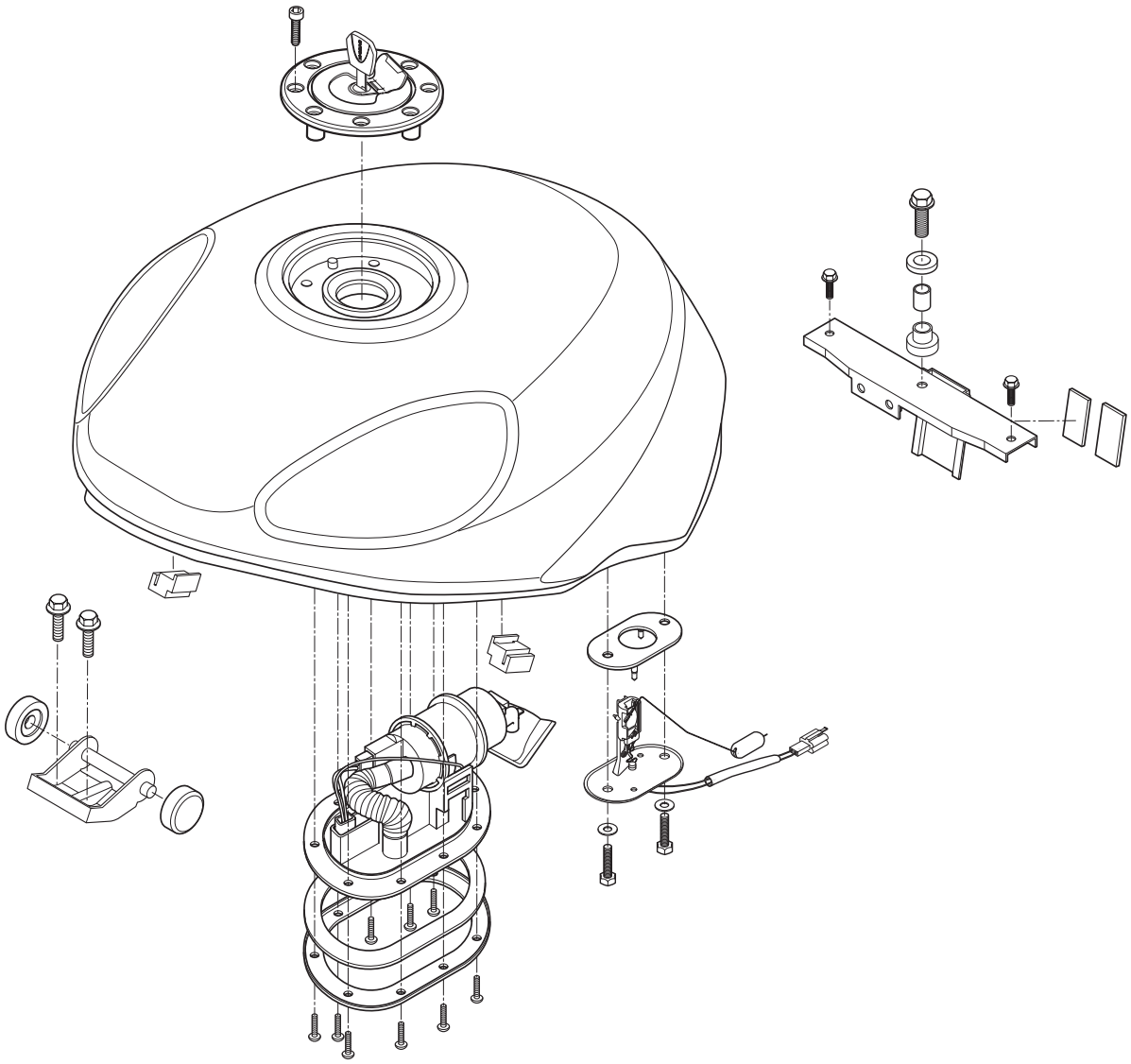

REMOVAL AND DISASSEMBLY

- Remove the front seat.

- Remove the fuel tank mounting bolts and fuel tank bracket mounting bolt. (GV650 PRO D spec)
- Remove the fuel tank mounting bolts and take off the hooks. (GT650/P/S/REi D spec)

- Disconnect the fuel gauge coupler ①.

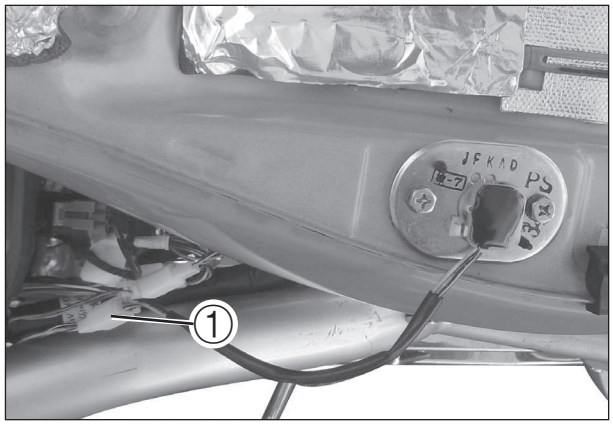

- Remove the fuel pump coupler ②.
- Remove the fuel injector hose ③.

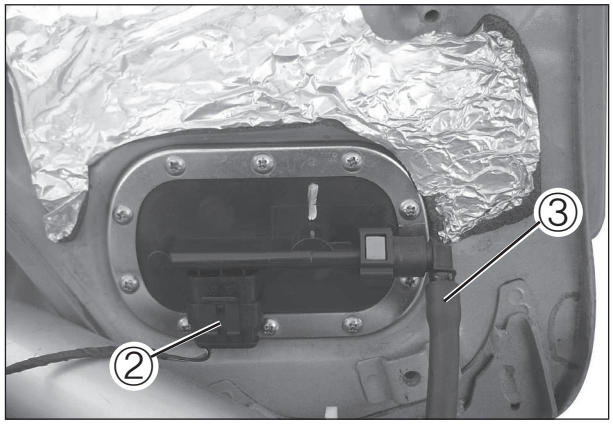

⚠ CAUTION

After disconnecting the fuel injector hose ③, insert a blind plug into the end to stop fuel leakage.

● Remove the fuel tank rearward.

⚠ CAUTION

As gasoline leakage may occur in this operation, keep away from fire and sparks.

● Remove the fuel pump assembly ① by removing its mounting bolts diagonally.

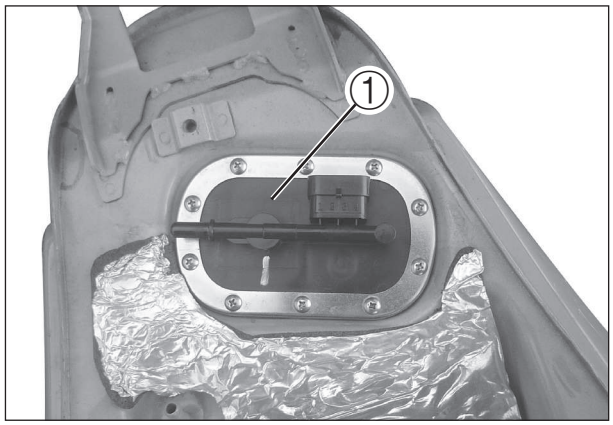

⚠ WARNING

❖ Gasoline is highly flammable and explosive.
❖ Keep heat, spark and flame away.

● Remove the fuel gauge ②.

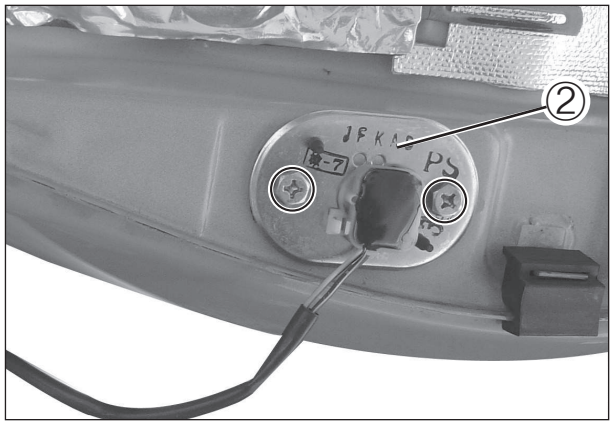

REASSEMBLY AND INSTALLATION

Reassembly and installation the fuel tank in the reverse order of removal and disassembly.

● When installing the fuel pump assembly, first tighten all the fuel pump assembly mounting bolts lightly in diagonal stages, and then tighten them in the above tightening order.

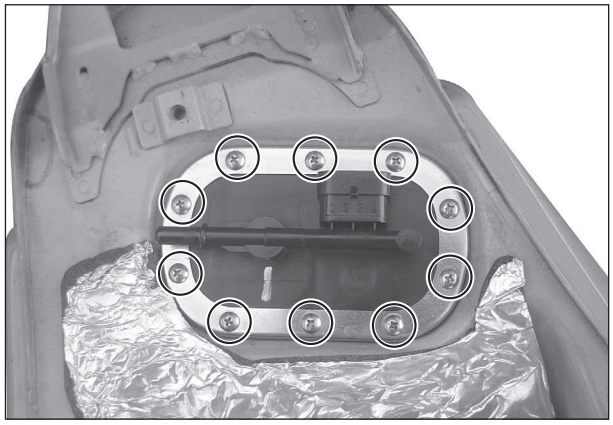

NOTE

When installing the fuel pump assembly, apply a small quantity of the THREAD LOCK to the thread portion of the fuel pump mounting bolt.

LOCK **THREAD LOCK**

FUEL PRESSURE OF FUEL PUMP INSPECTION

- Remove the front seat.
- Place a rag under the fuel injector hose.
- Disconnect the fuel injector hose from the fuel hose joint.
- Install the special tool between the fuel tank and fuel hose joint.

TOOL Fuel pump pressure gauge : 09915-54510

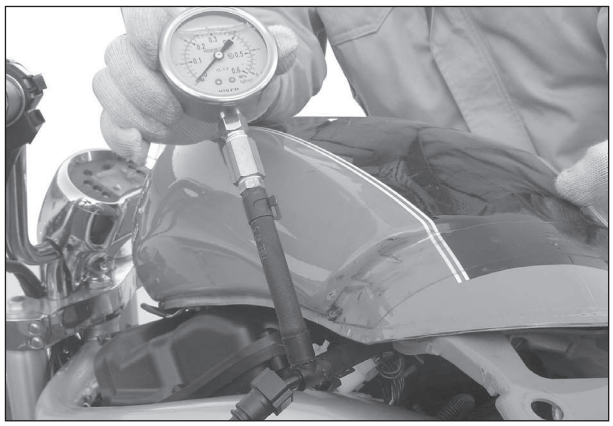

Turn the ignition switch "ON" position and check the fuel pressure of the fuel pump.

Fuel pressure of fuel pump	Approx. 2.25 ~ 2.50 kgf/cm^2 (220 ~ 245 kPa, 32.0 ~ 35.6 psi)

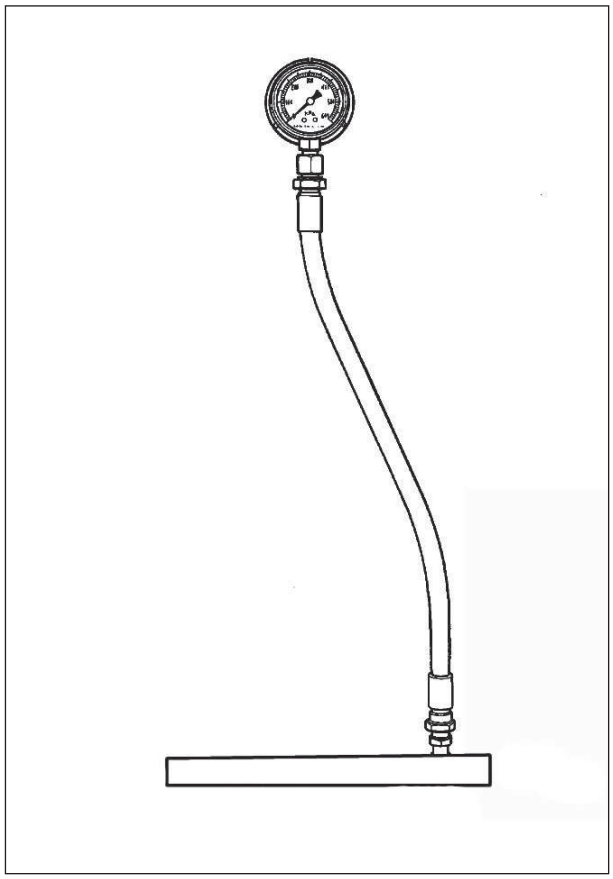

If the fuel pressure is lower than the specification, inspect the following items :

* Fuel hose leakage
* Clogged fuel filter
* Pressure regulator
* Fuel pump

If the fuel pressure is higher than the specification, inspect the following items :

* Fuel pump check valve
* Pressure regulator

⚠ WARNING

- **Before removing the special tool, turn the ignition switch to "OFF" position and release the fuel pressure slowly.**
- **Gasoline is highly flammable and explosive. Keep heat, sparks and flame away.**

FUEL PUMP RELAY INSPECTION

Fuel pump relay is located the left side of the frame.

- Remove the frame cover.
- Remove the fuel pump relay ①.

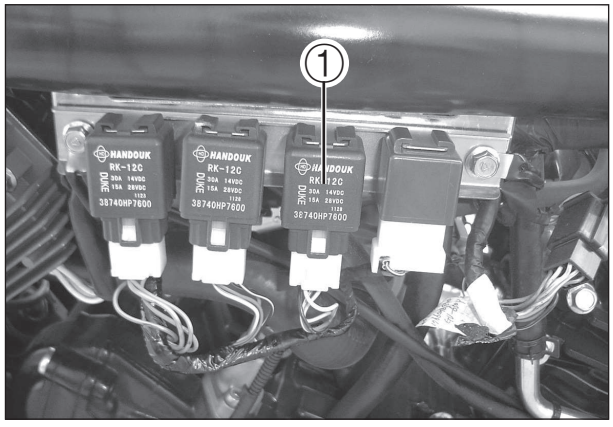

First, check the insulation between ① and ② terminals with pocket tester. Then apply 12 volts to ③ and ④ terminals, ⊕ to ③ and ⊖ to ④, and check the continuity between ① and ②.
If there is no continuity, replace it with a new one.

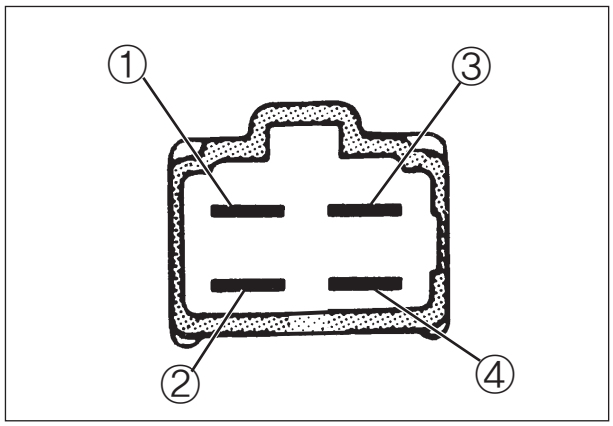

FUEL MESH FILTER INSPECTION AND CLEANING

- If the fuel mesh filter is clogged with sediment or rust, fuel will not flow smoothly and loss in engine power may result.
- Blow the fuel mesh filter with compressed air.

NOTE
If the fuel mesh filter is clogged with many sediment or rust, replace the fuel filter cartridge with a new one.

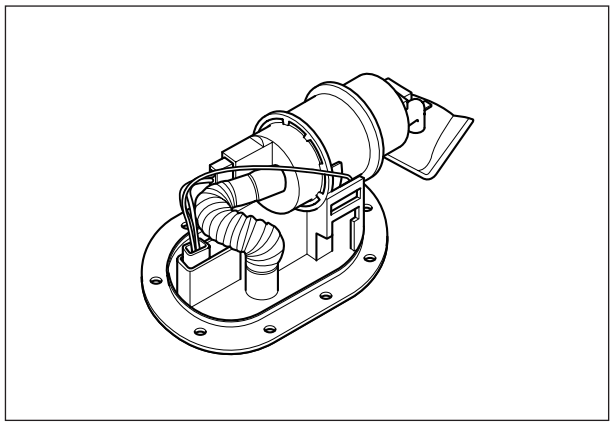

FUEL GAUGE INSPECTION

- Measure resistance between the terminals when float is at the position instead below.

Fuel float position	Resistance between terminals
F	Approx. 90 ~ 100 Ω
1/2	Approx. 38 Ω
E	Approx. 4 ~ 10 Ω

- If the measured resistance is out of the specification, replace the gauge with a new one.
- Inspect the fuel level meter.

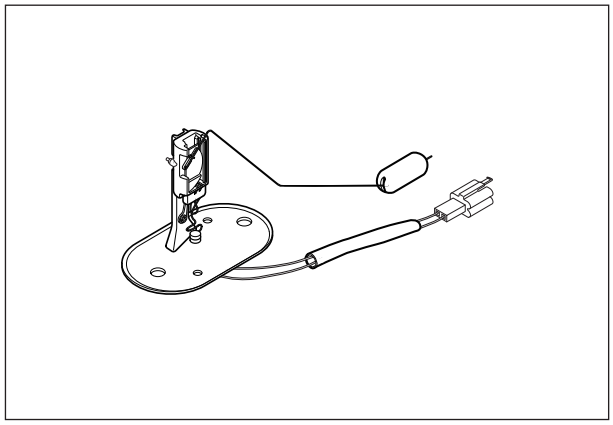

THROTTLE BODY

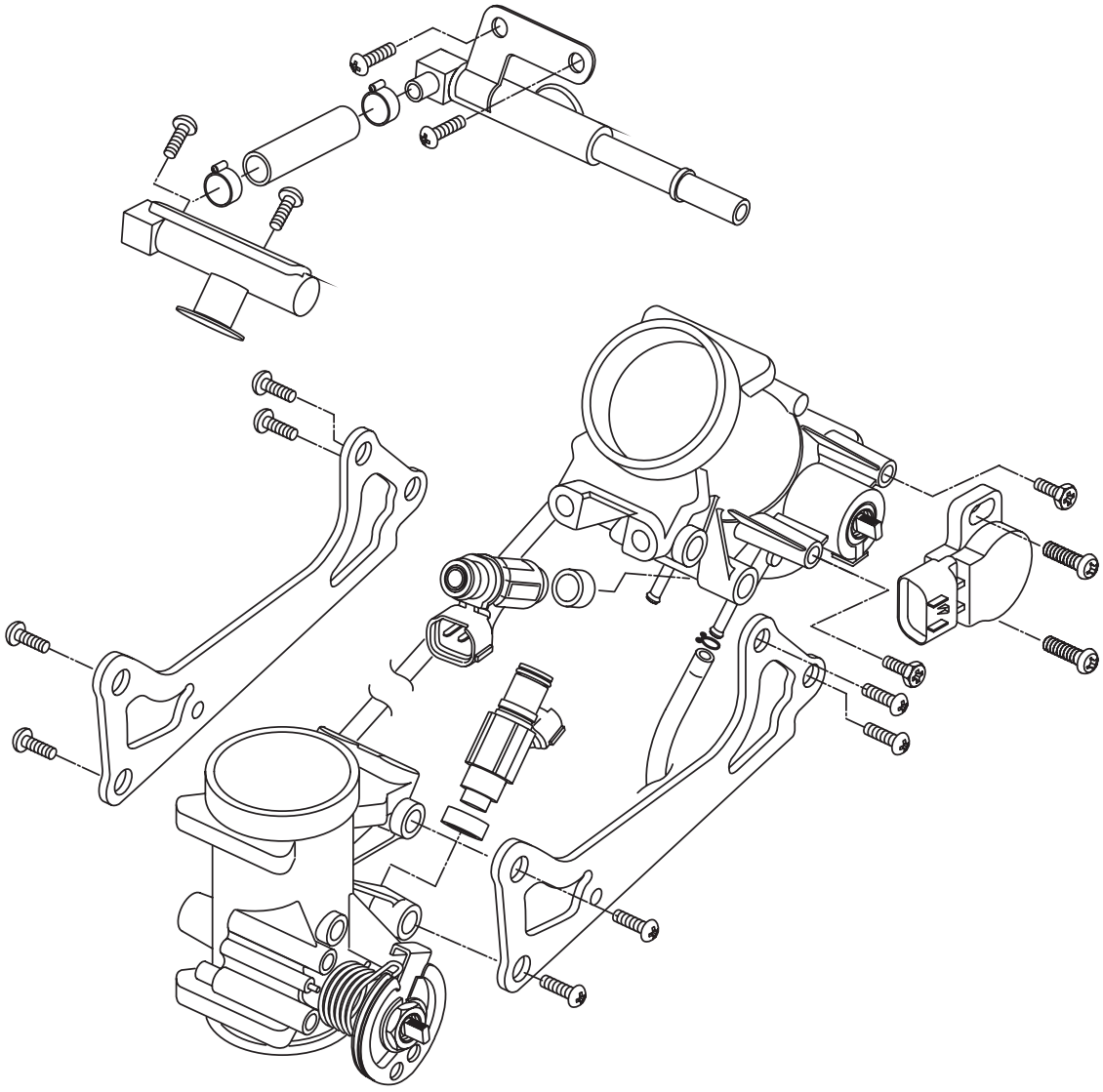

REMOVAL

- Remove the fuel tank.
- Remove the air cleaner box.
- Disconnect the fuel hoses.
- Remove the all couplers is related to the throttle body.

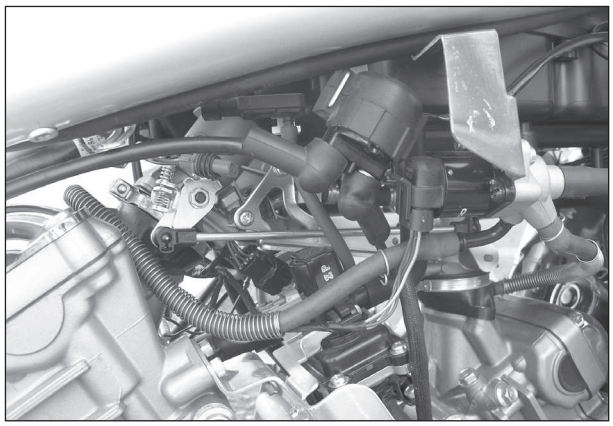

- Loosen the throttle body clamp screws.

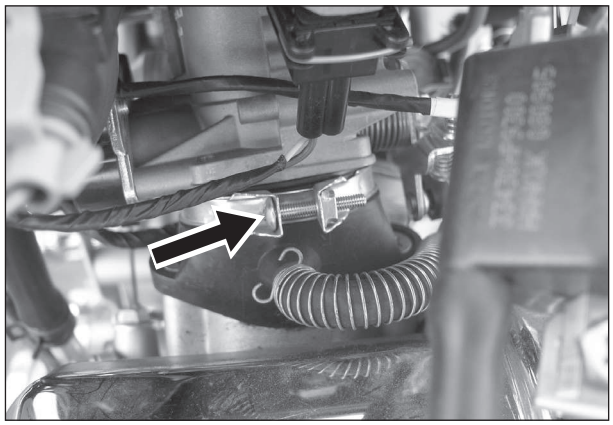

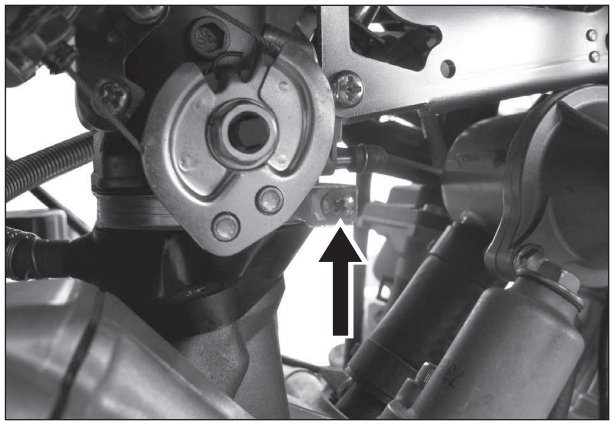

- Disconnect the throttle cables from their drum.
- Dismount the throttle body assembly.

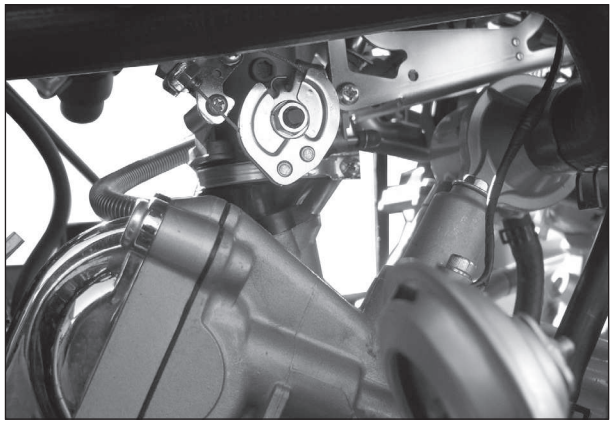

⚠ CAUTION

- ❖ **Be careful not to damage the throttle cable bracket when dismounting or remounting the throttle body assembly.**
- ❖ **After disconnecting the throttle cables, do not snap the throttle valve from full open to full close. It may cause damage to the throttle valve and throttle body.**

CLEANING

- Clean all passageways with a spray-type throttle body cleaner and blow dry with compressed air.

⚠ WARNING

Some throttle body cleaning chemicals, especially dip-type soaking solutions, are very corrosive and must be handled carefully. Always follow the chemical manufacturer's instructions on proper use, handling and storage.

⚠ CAUTION

Do not use wire to clean passageways. Wire can damage passageways. If the components cannot be cleaned with a spray cleaner it may be necessary to use a dip-type cleaning solution and allow them to soak. Always follow the chemical manufacturer's instructions for proper use and cleaning of the throttle body components. Do not apply throttle body cleaning chemicals to the rubber and plastic materials.

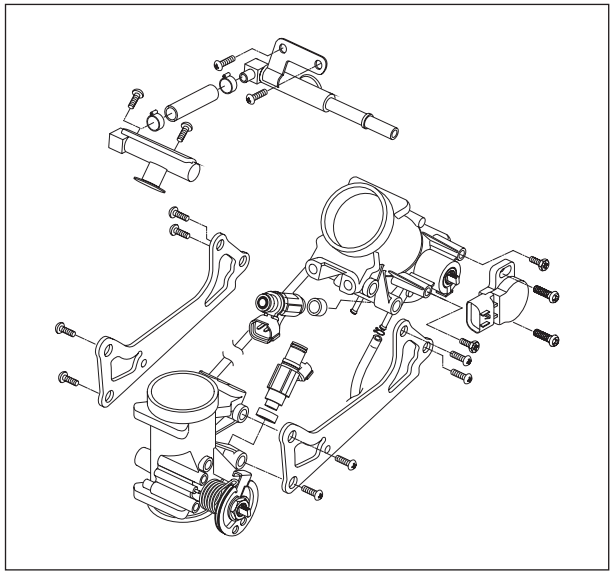

INSPECTION

- Check following items for any damage or clogging.
  - * O-ring
  - * Injector cushion seal
  - * Throttle valve
  - * Intake pipe
  - * Throttle shaft bushing and seal
  - * Throttle body
  - * Fuel injector
  - * Vacuum hose

Check fuel injector filter for evidence of dirt and contamination. If present, clean and check for presence of dirt in the fuel lines and fuel tank.

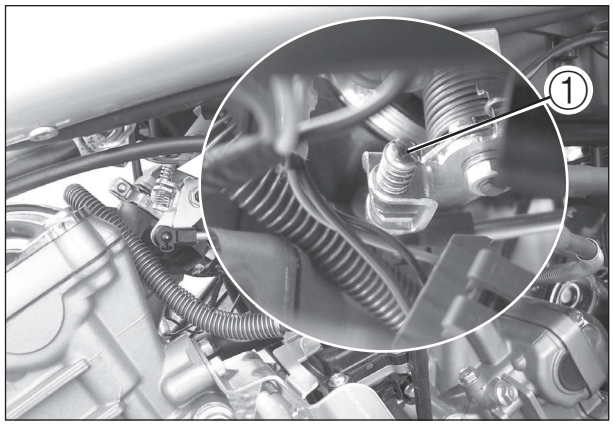

INSTALLATION

Installation is in the reverse order of removal.
Pay attention to the following points :

⚠ CAUTION

The idle screw ① adjustment affect the control of the ECU. It can cause start-up off.
So should never adjust.

- Connect the throttle cable to the throttle cable drum.
- Adjust the throttle cable play with the cable adjusters.

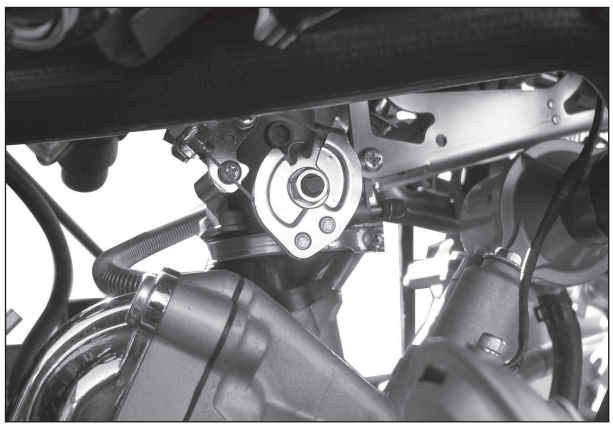

ELECTRICAL SYSTEM

CONTENTS

LOCATION OF ELECTRICAL COMPONENTS ..... 88 [6-1]

IGNITION SYSTEM ..... 90 [6-3]

CHARGING SYSTEM ..... 93 [6-7]

STARTER SYSTEM AND SIDE STAND IGNITION INTERLOCK SYSTEM ..... 95 [6-11]

LOCATION OF ELECTRICAL COMPONENTS

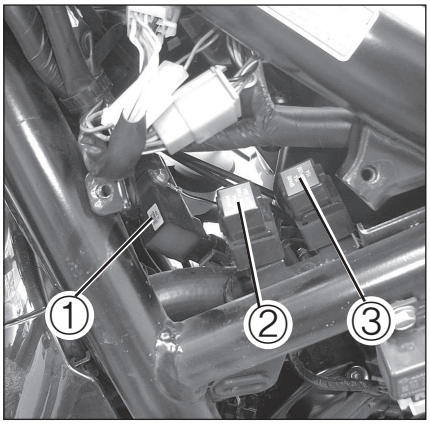

① Ignition coil NO.1
② Main fuse (30 A)
③ ECU fuse (15 A)

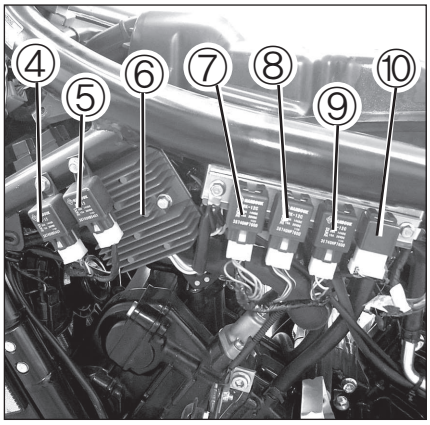

④ Cooling fan motor relay
⑤ Head lamp relay
⑥ Regulator / Rectifier
⑦ Side stand relay
⑧ Main relay
⑨ Fuel pump relay
⑩ Turn signal relay

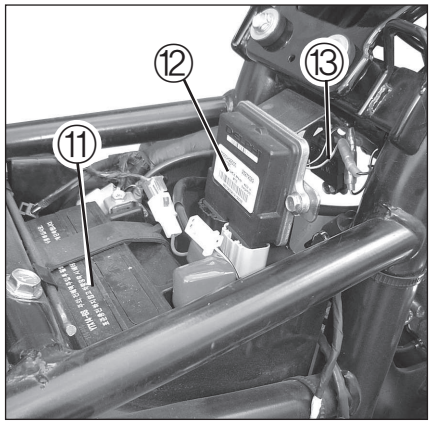

⑪ Battery
⑫ ECU
⑬ RO switch

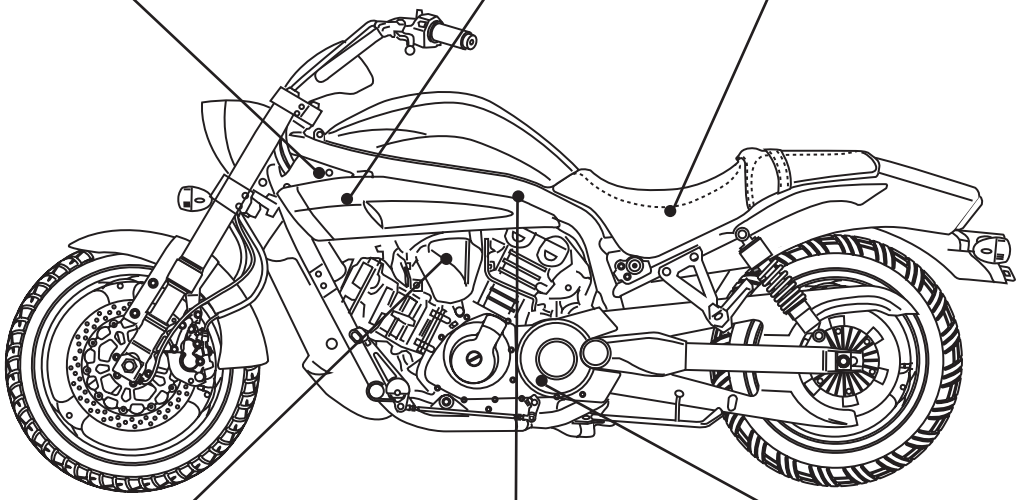

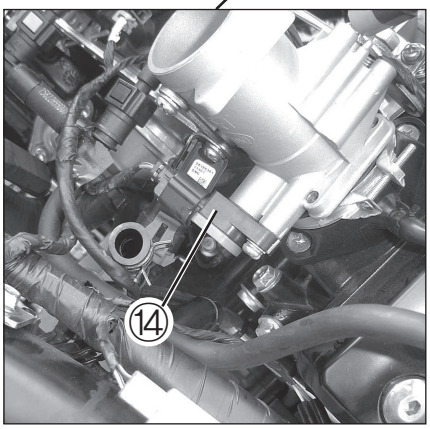

⑭ TP sensor

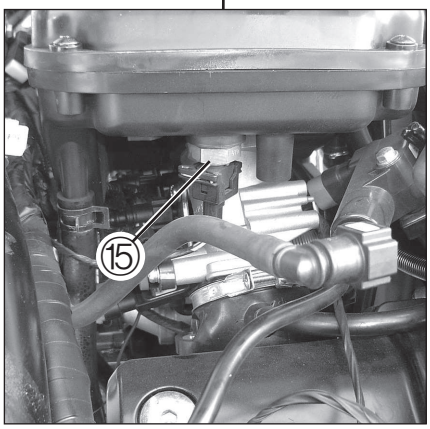

⑮ IAT sensor

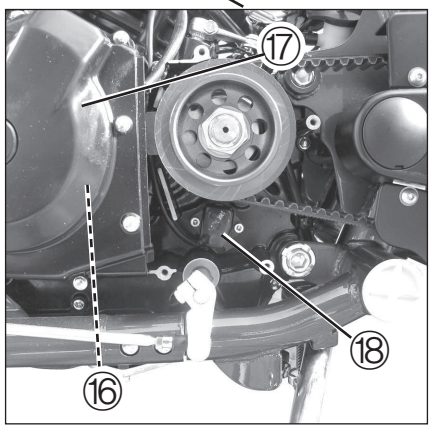

⑯ Magneto
⑰ Pick-up coil
⑱ GP switch

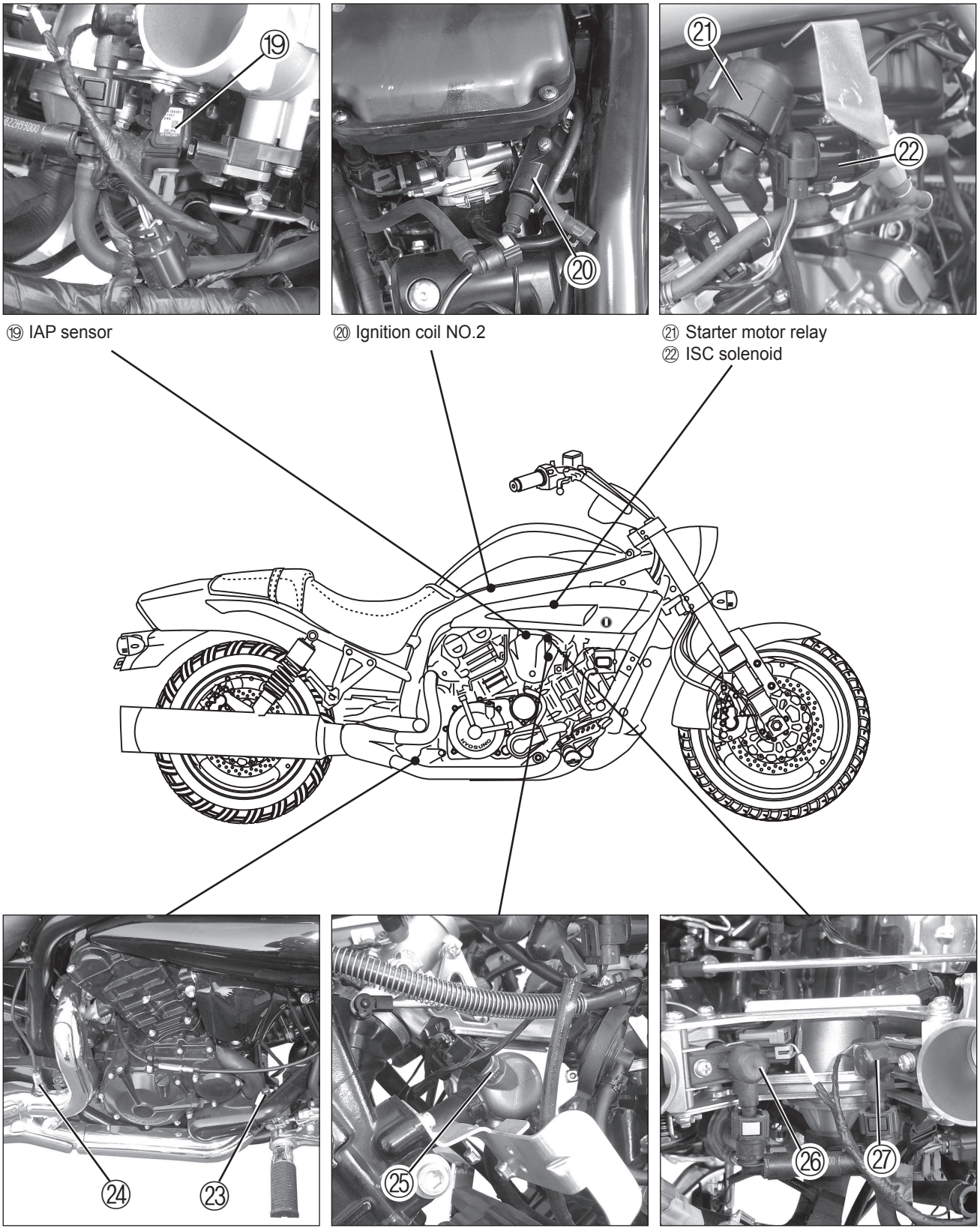

⑲ IAP sensor
⑳ Ignition coil NO.2
㉑ Starter motor relay
㉒ ISC solenoid
㉓ Oxygen sensor NO.1
㉔ Oxygen sensor NO.2
㉕ WT sensor
㉖ Fuel injector NO.1
㉗ Fuel injector NO.2

IGNITION SYSTEM

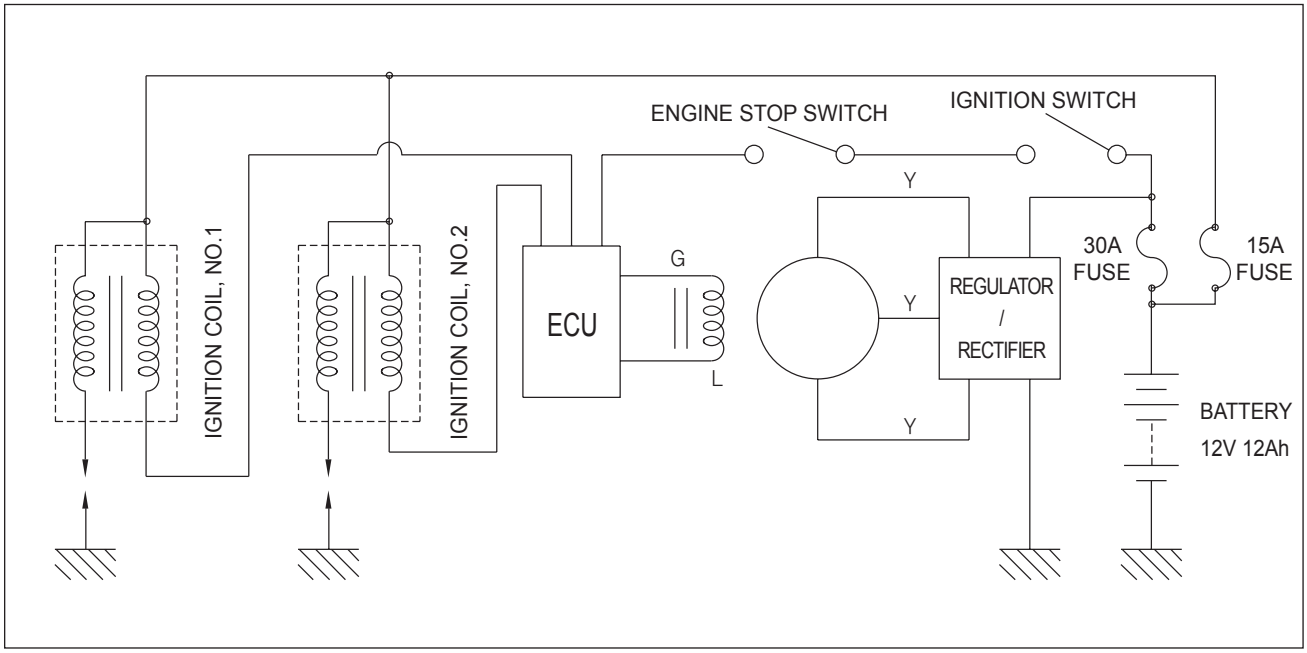

⊙ INSPECTION

■ MAGNETO

Using the pocket tester, measure the resistance between the lead wires in the following table.
If the resistance is not within the specified value, replace the stator coil, with a new one.

Stator coil resistance	Standard
Pick-up coil	G–L 110 ~ 140 Ω
Charging coil	Y–Y 0.2 ~ 0.4 Ω

Tester knob indication : Resistance (Ω)

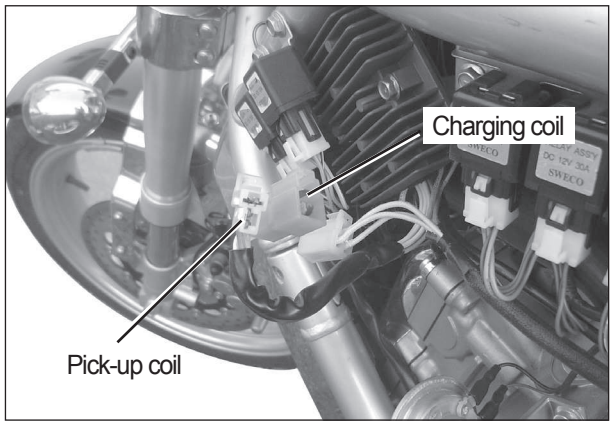

NOTE
When making above test, it is not necessary to remove the magneto.

■ IGNITION COIL PRIMARY PEAK VOLTAGE INSPECTION

- Remove the fuel tank and frame cover.
- Disconnect the two spark plug caps.
- With the spark plug cap connected, place a new spark plug on the engine to ground it.

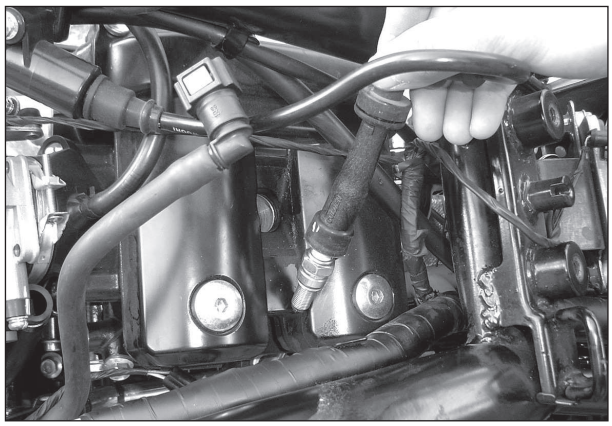

NOTE

❖ ***Check that all the couplers are connected.***
❖ ***Check that the all battery is fully charged.***

Measure the NO.1 and NO.2 ignition coil primary peak voltage using the tester in the following procedure.

- Connect the tester as follows.

NO.1 Ignition coil
⇒ ⊕ Probe : BY lead wire terminal
⊖ Probe : Ground

NO.2 Ignition coil
⇒ ⊕ Probe : WL lead wire terminal
⊖ Probe : Ground

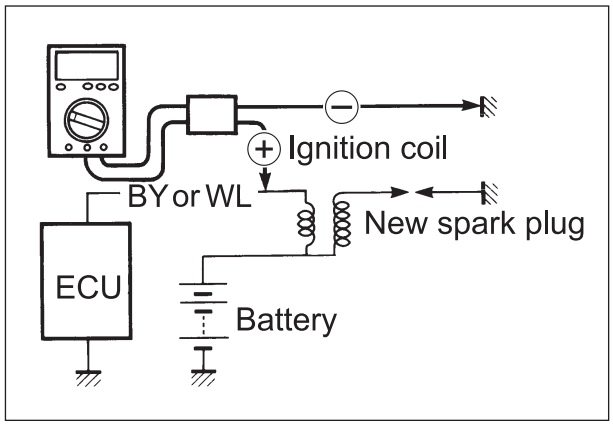

NOTE

Do not disconnect the ignition coil / plug cap lead wire couplers.

- Shift the transmission into the neutral and then turn the ignition switch to the “ON” position.
- Squeeze the clutch lever.
- Press the starter switch and allow the engine to crank for a few seconds, and then measure the ignition coil primary peak voltage.
- Repeat the above procedure a few times and measure the highest ignition coil primary peak voltage.

Ignition coil primary peak voltage	400 V and more

Tester knob indication : Voltage (⎓)

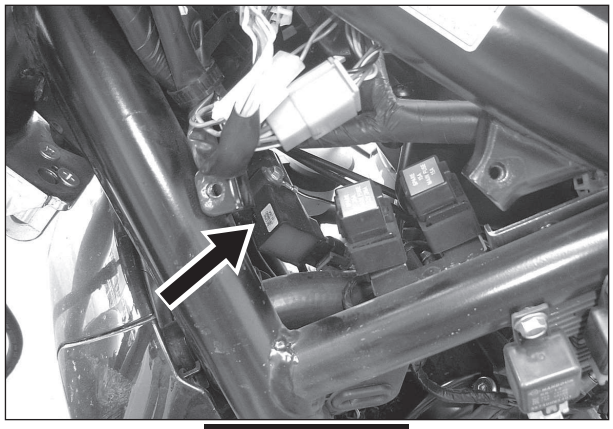

Ignition coil NO.1

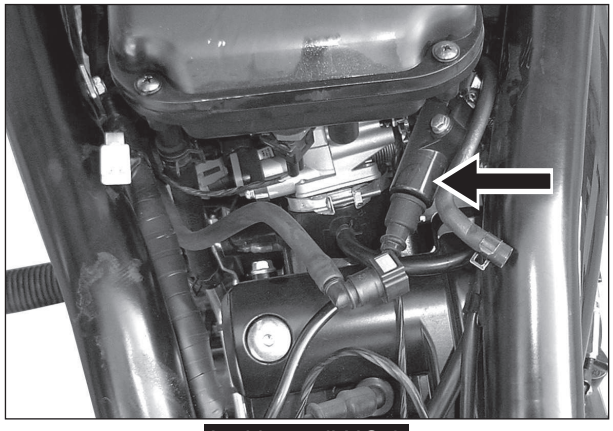

Ignition coil NO.2

⚠ WARNING

While testing, do not touch the tester probes and spark plugs to prevent receiving an electric shock.

If the peak voltage is lower than the specified values, inspect the ignition coil. (Refer to the next page.)

■ IGNITION COIL RESISTANCE INSPECTION

- Remove the fuel tank.
- Disconnect the ignition coil read wire.

Measure the ignition coil resistance in bolt the primary and secondary windings. If the resistance is not within the standard range, replace the ignition coil with a new one.

IGNITION COIL / PLUG CAP RESISTANCE	
Primary	0.52 ~ 0.64 Ω (⊕ Terminal – ⊖ Terminal)
Secondary	6.4 ~ 7.8 KΩ (Plug cap – ⊕ Terminal)

Tester z indication : Resistance (KΩ)

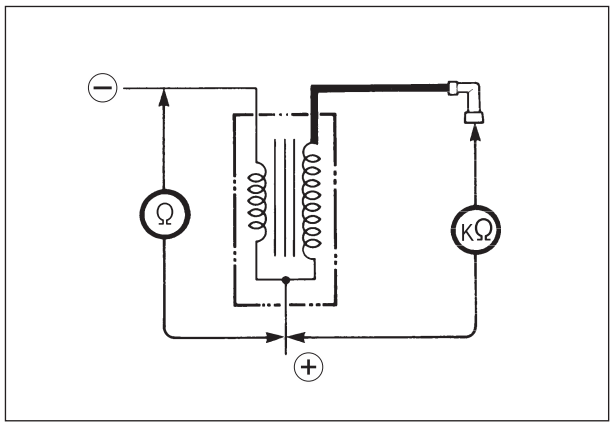

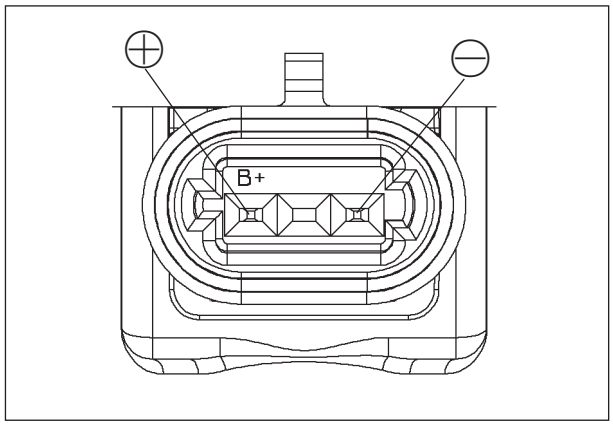

CHARGING SYSTEM

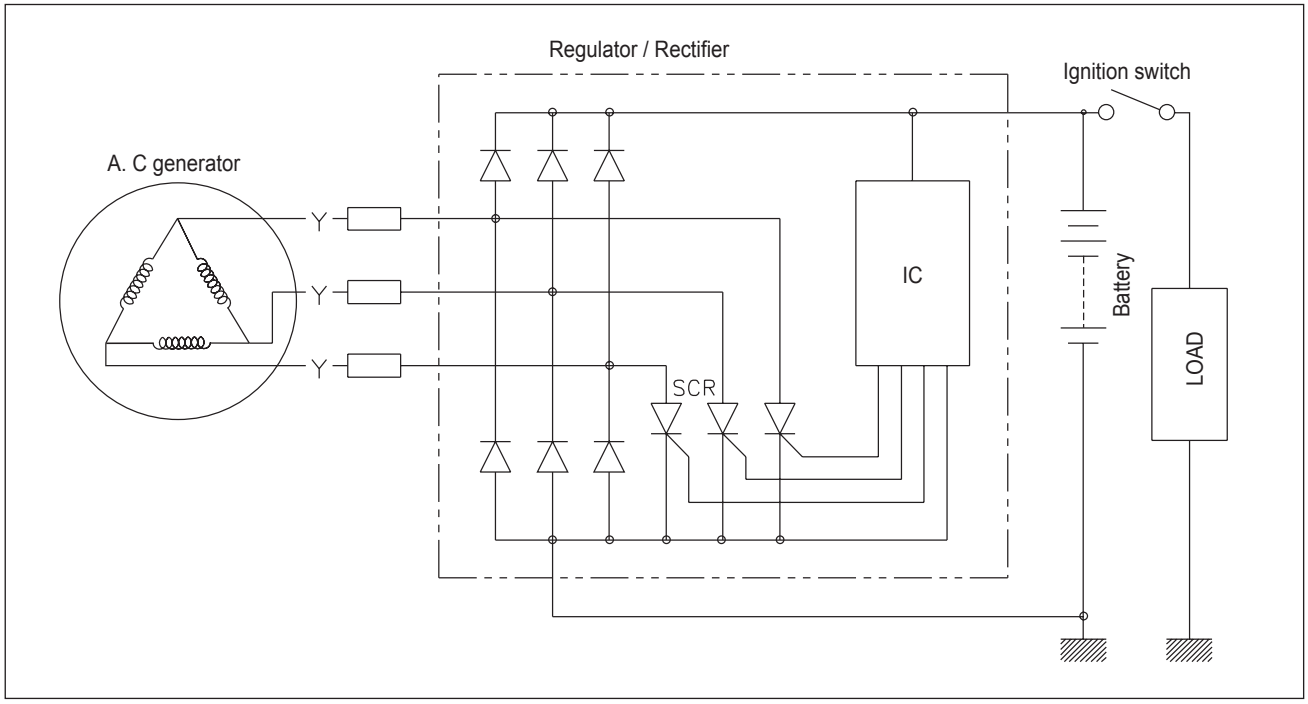

⊙ INSPECTION

■ CHARGING OUTPUT CHECK

Start the engine and keep it running at 5,000 rpm.
Using the pocket tester, measure the DC voltage between the battery terminal ⊕ and ⊖.
If the voltage is not within the specified value, check the magneto no-load performance and regulator / rectifier.

⚠ CAUTION

When making this test, be sure that the battery is full-charged condition.

Standard charge	13.5 ~ 15.0 V (at 5,000 rpm)

Tester knob indication : Voltage (⎓)

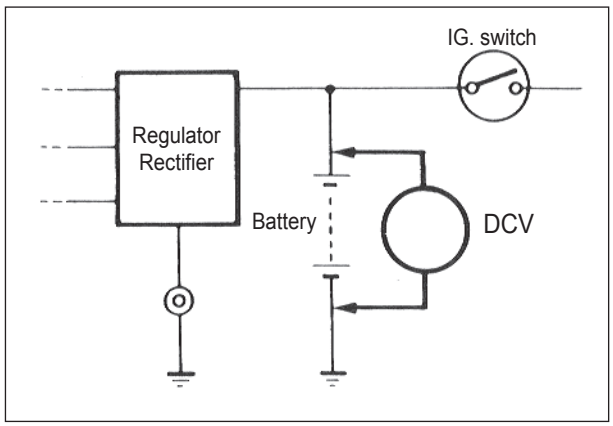

■ MAGNETO NO-LOAD PERFOR-MANCE

Disconnect the three lead wires from the magneto terminal.
Start the engine and keep it running at 5,000 rpm.
Using the pocket tester, measure the AC voltage between the three lead wires.
If the voltage is under the specified value, replace the magneto with a new one.

Standard NO-load perfor-mance of magneto	Over 70 V (at 5,000 rpm)

Tester knob indication : Voltage (⎓)

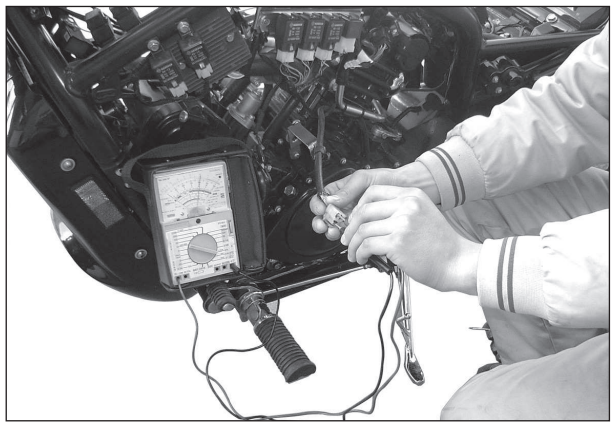

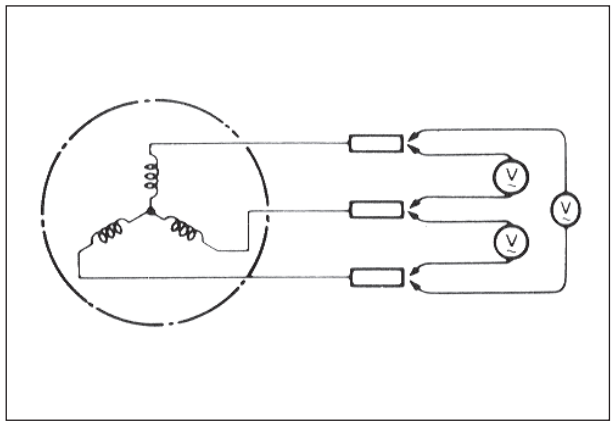

■ REGULATOR / RECTIFIER

Disconnect the regulator / rectifier couplers.
Measure the voltage between the terminals using the pocket tester as indicated in the table below.
If the voltage is not within the specified value, replace the regulator / rectifier with a new one.

Unit : V

⊖ Tester probe \ ⊕ Tester probe	①	②	③	④	⑤
①		0	0	0	0.4~0.7
②	0		0	0	0.4~0.7
③	0	0		0	0.4~0.7
④	0.4~0.7	0.4~0.7	0.4~0.7		0.5~1.2
⑤	0	0	0	0	

Tester knob indication : Diode test (⊣◂)

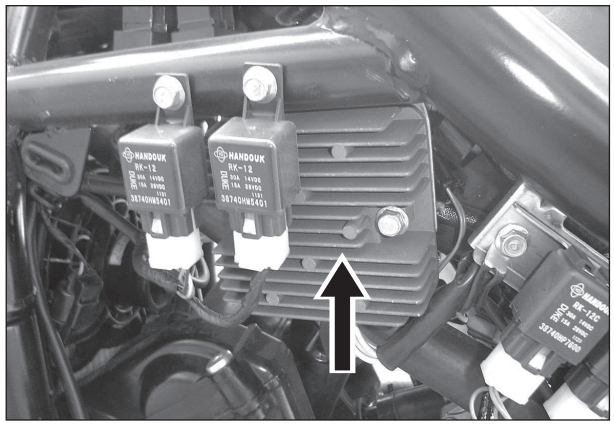

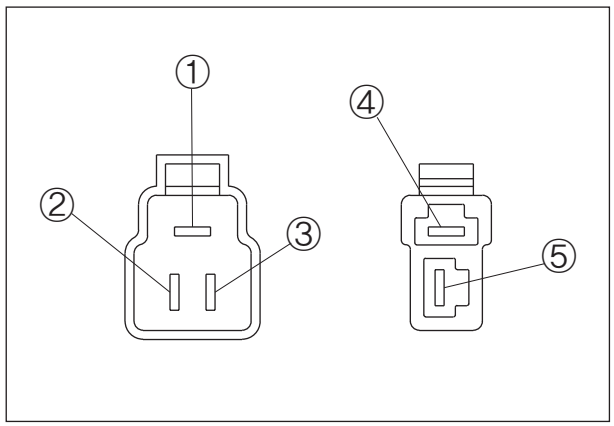

STARTER SYSTEM AND SIDE STAND IGNITION INTERLOCK SYSTEM

⊙ STARTER SYSTEM DESCRIPTION

The starter system consists of the following components : the starter motor, starter relay, clutch lever switch, side stand switch, GP switch, starter switch, engine stop switch, ignition switch and battery.

Pressing the starter switch (on the right handlebar switch) energizes the starter relay, causing the contact points to close, thus completing the circuit from the starter motor to the battery.

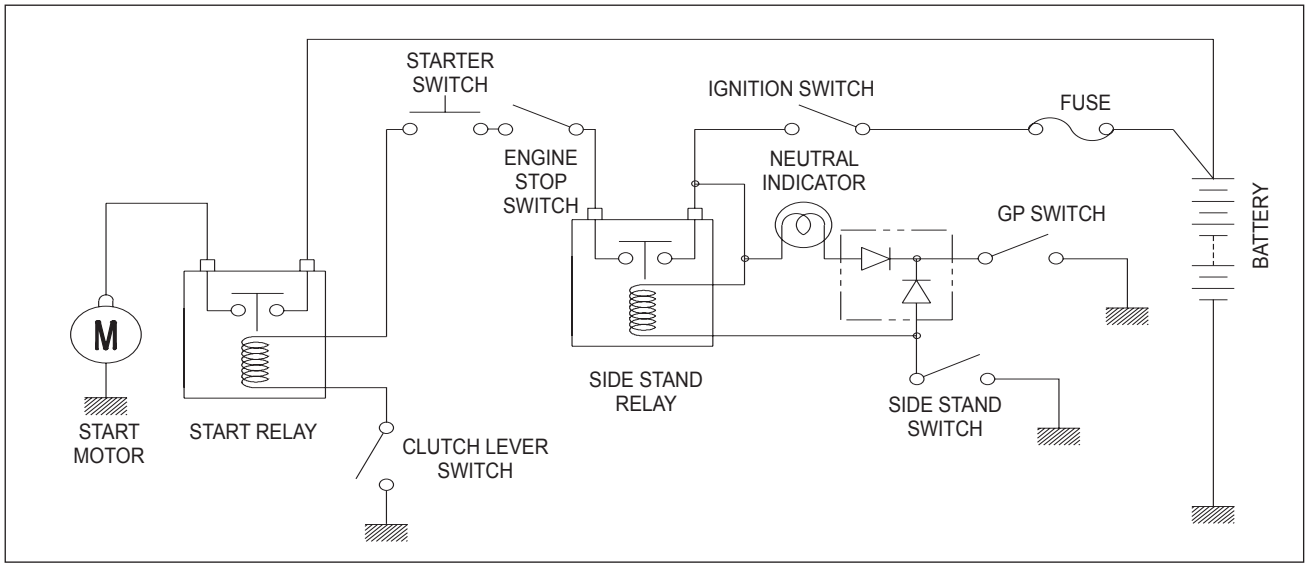

⊙ SIDE STAND / IGNITION INTERLOCK SYSTEM DESCRIPTION

This side stand / ignition interlock system prevents the motorcycle from being started with side stand down.

The system is operated by an electric circuit provided between the battery and ignition coil.

The circuit consists of the neutral indicator light and switches.

The ignition coils will send voltage to the spark plugs depending on what gear the transmission is in and whether the side stand is either up or down.

The gear position and side stand switches work together in this system.

The ignition coil work only in two situations as follows.

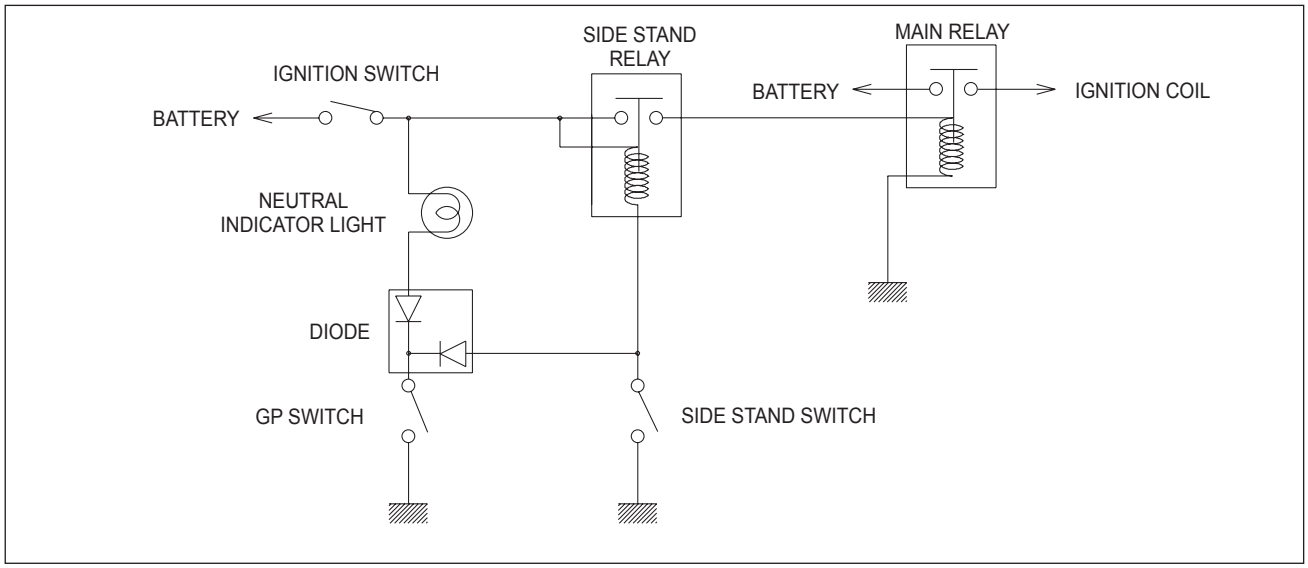

■ TRANSMISSION : Neutral - "ON"
Side stand - Down
Clutch lever - Squeeze

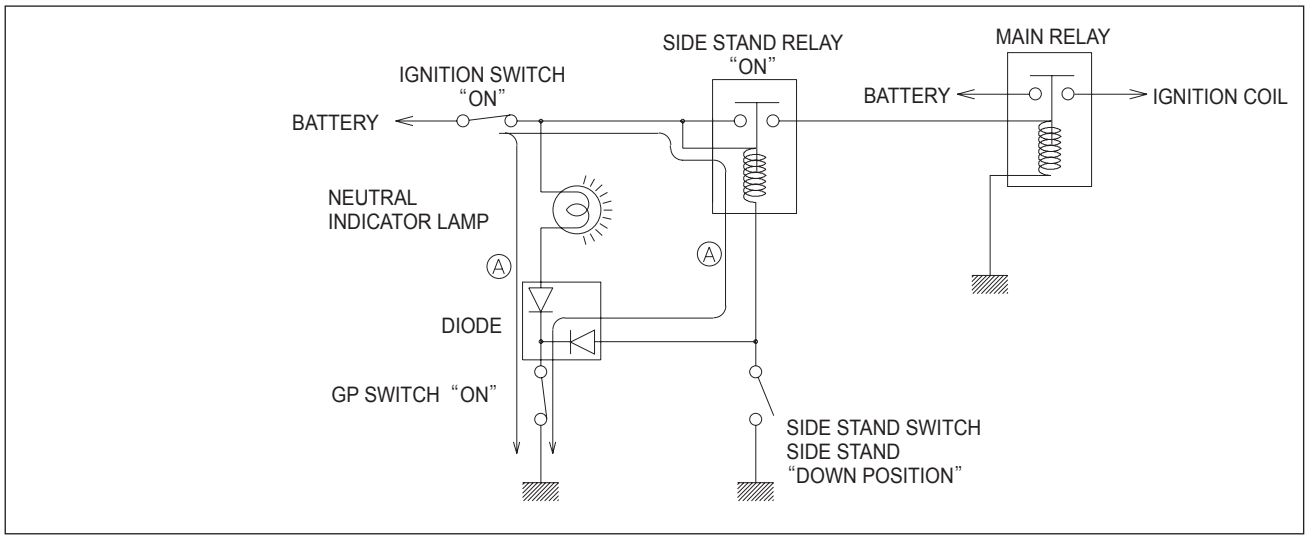

■ TRANSMISSION : Neutral - "OFF"
Side stand - Up
Clutch lever - Squeeze

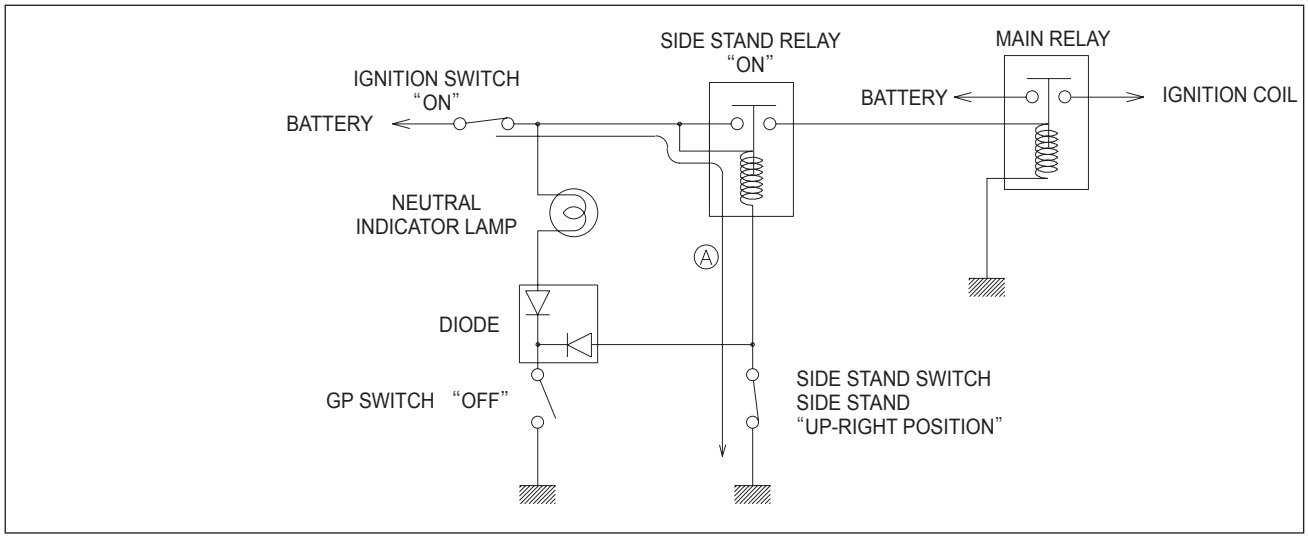

『GV650 PRO D spec』 & 『GT650/P/S/REi D spec』 are equipped with the side stand ignition interlock system.
If the transmission is in neutral or side stand up, you can only start the engine by squeezing in the clutch lever.

NO.	Neutral switch	Clutch lever	Side stand	Engine Start
1	●	●	△	Possible
2	△	●	●	Possible
3	●	△	△	Impossible
4	△	●	△	Impossible
5	△	△	●	Impossible

NOTE	
●	*On, Squeeze or Up*
△	*Off, Release or Down*

CHASSIS

CONTENTS

EXTERIOR PARTS ..... ***98 [7-1-1]***

FRONT FORK [GT650R EJ D spec 2013 model] ..... ***100 [7-15]***

7

EXTERIOR PARTS

⊙ SIDE COWLING INNER [GT650R EJ D spec 2013 model]

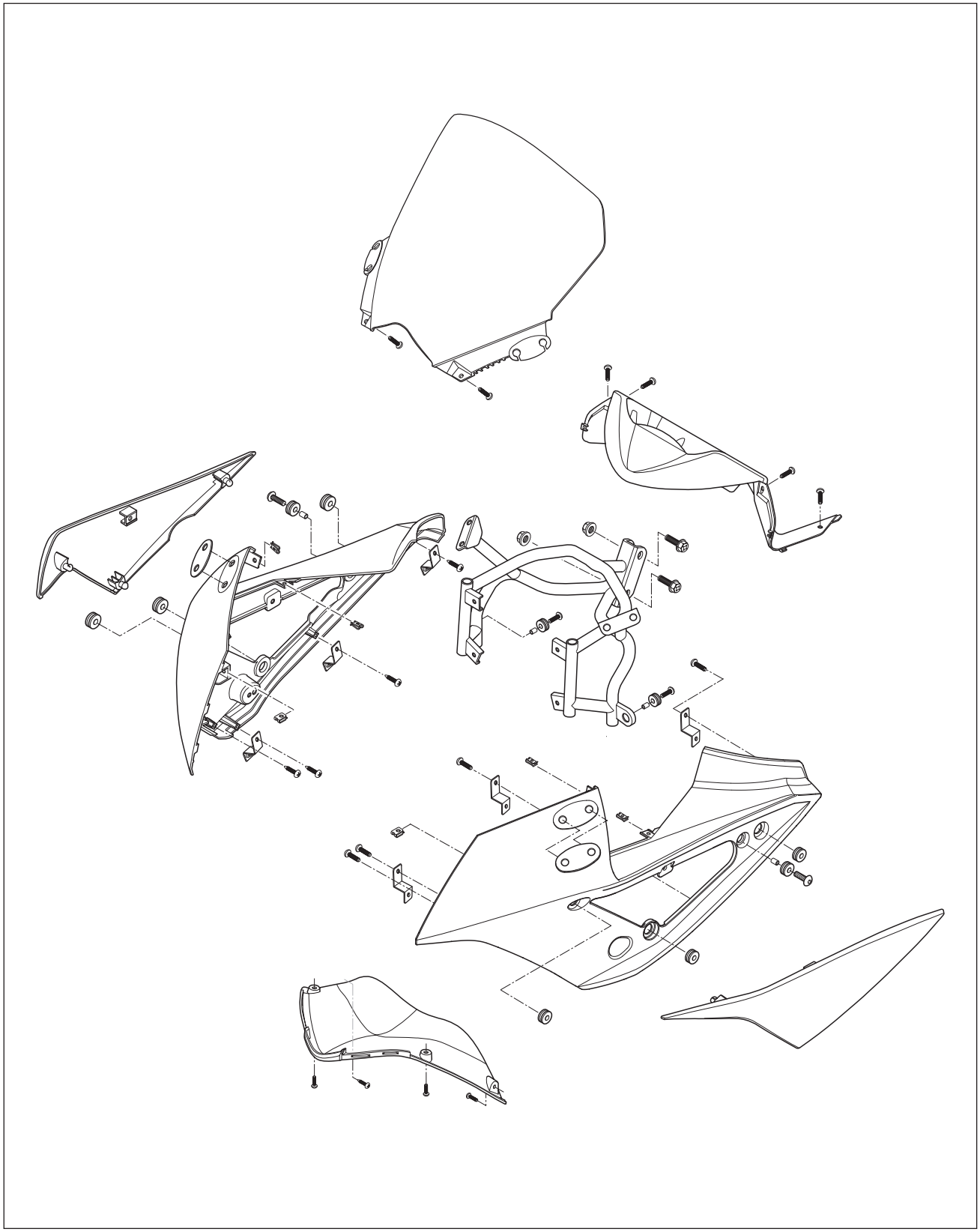

The『GT650R EFi D spec』&
『GT650S EFi D spec』have the “side cowling inner ①” at the rightside and leftside.
Use the “side cowling inner RH (Right Hand)” to operate the radiator cap ② .

To disassemble the “side cowling inner RH (Right Hand)”, remove the scrivet ③ from the inside and unhook the hook ④ , ⑤ , ⑥ .

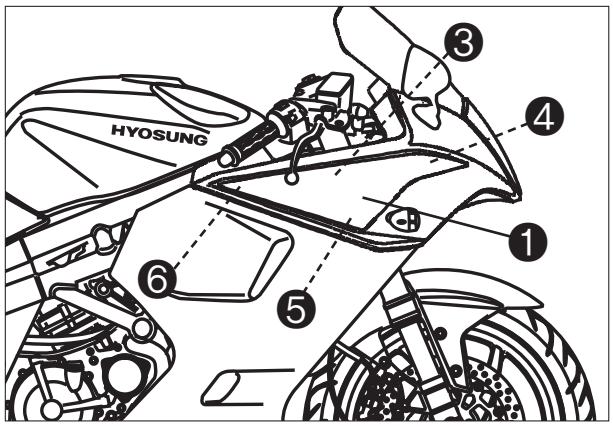

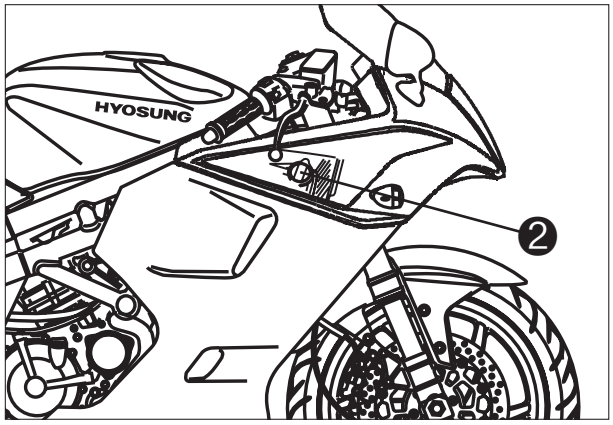

⚠ WARNING

You can be injured by scalding fluid or steam if you open the radiator cap when the engine is hot.
After the engine cools, wrap a thick cloth around cap and carefully remove the cap by turning it a quarter to allow pressure to escape and then turn the cap all the way off.

FRONT FORK [GT650R EJ D spec 2013 model]

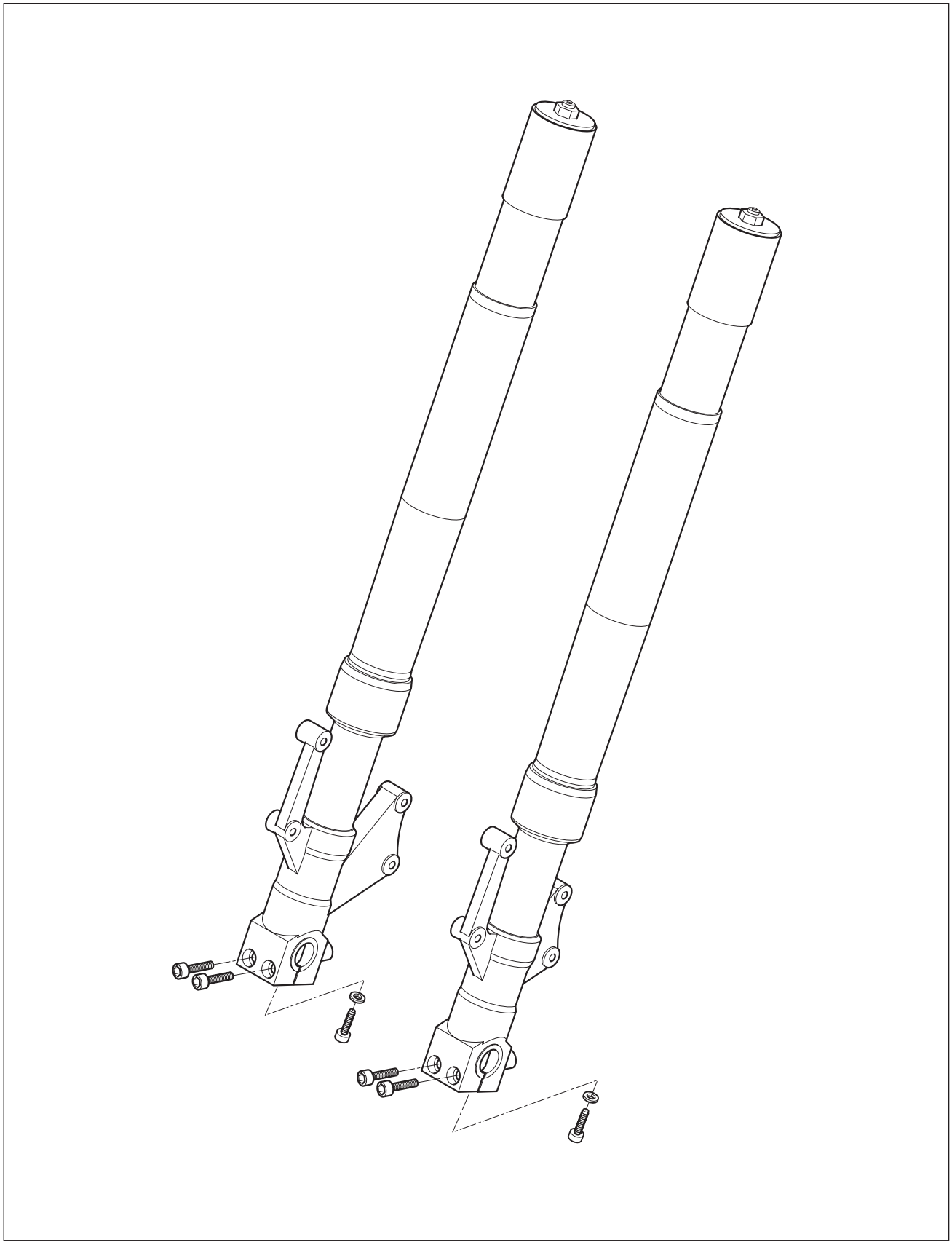

⊙ REMOVAL AND DISASSEMBLY

- Remove the body cowling.
- Remove the front fender.
- Take off the front wheel.

- Loosen the handlebar clamp bolts ①, right and left.

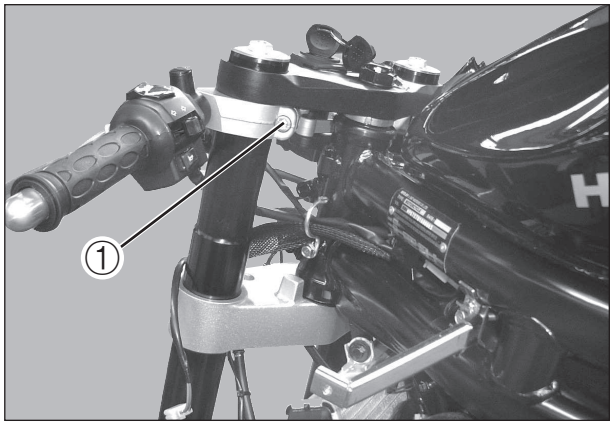

- Loosen the front fork upper ② and lower ③ clamp bolts, right and left.
- Remove the front brake hose clamp.
- Pull down the right and left front forks.

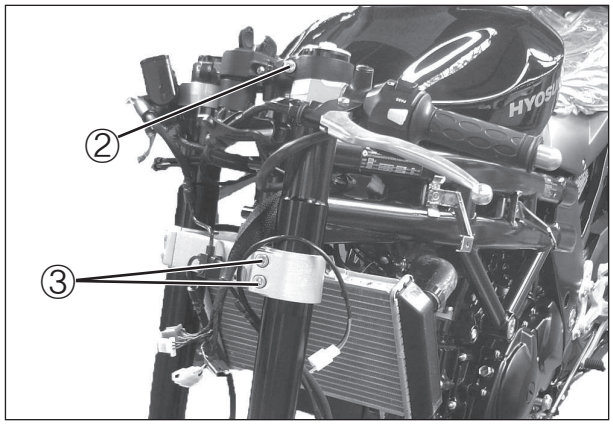

- Remove the front fork cap bolt ④ from the inner rod by loosening the lock nut ⑤.

⚠ CAUTION

Do not disassemble the front fork cap ⑥.

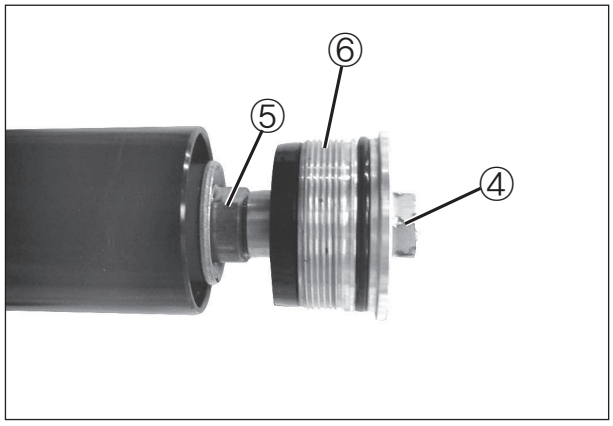

- Remove the spacer ①, spring retainer ②, spring ③ and spring guide ④.

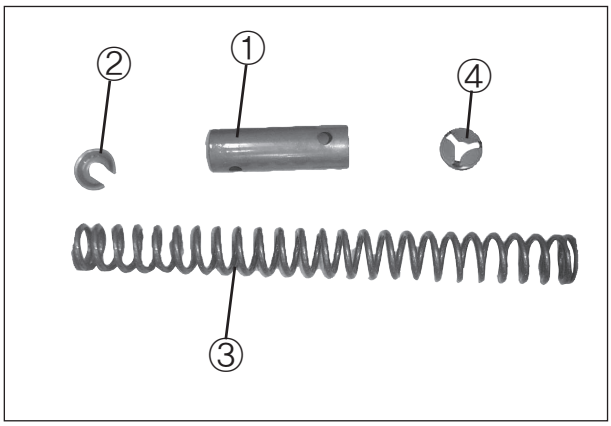

- Remove the outer tube ⑤ from the inner tube.

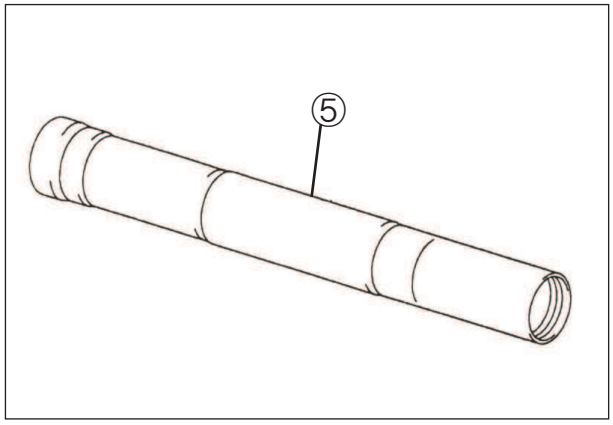

- Invert the front fork and stroke the inner rod several times to let out fork oil.
- Under the inverted condition of front fork, drain oil to hold it for a few time.

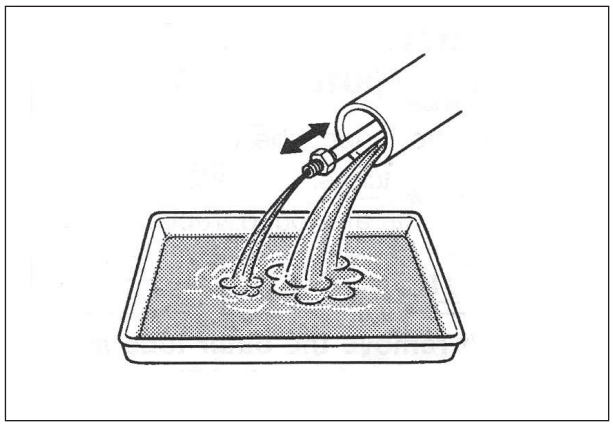

- Remove the dust seal ① and the oil seal stopper ring ②.

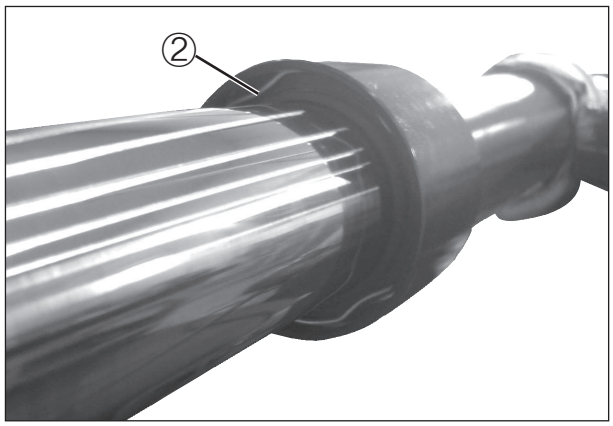

- Remove the oil seal ③ and oil seal retainer ④ by using the special tool.

  TOOL **Oil seal remover : 09913-50121**

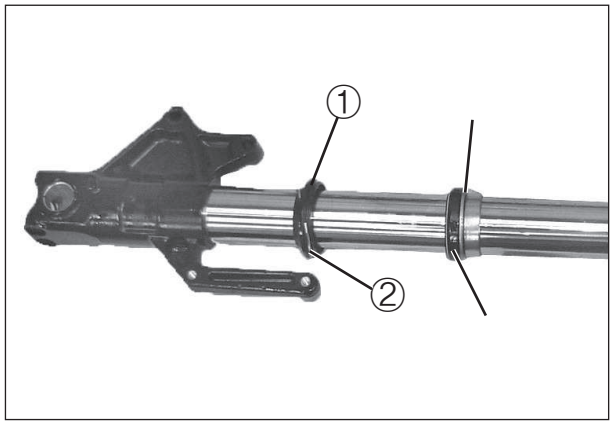

⚠ CAUTION

The removed oil seal must be replaced with a new one.

⊙ INSPECTION

■ INNER AND OUTER TUBES

Inspect the inner tube outer surface and inner tube slide metal ⑤, outer tube slide metal ⑥ face for scratches.
If any defects are found, replace them with a new one.

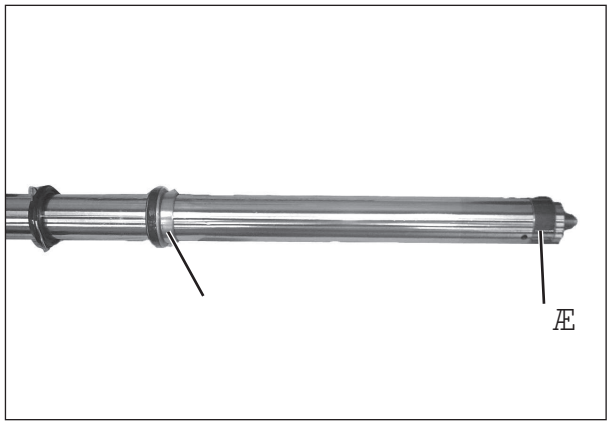

■ FORK SPRING

Measure the fork spring free length.
If it is shorter than the service limit, replace it with a new one.

Front fork spring free length	Service limit
	350 mm (13.8 in)

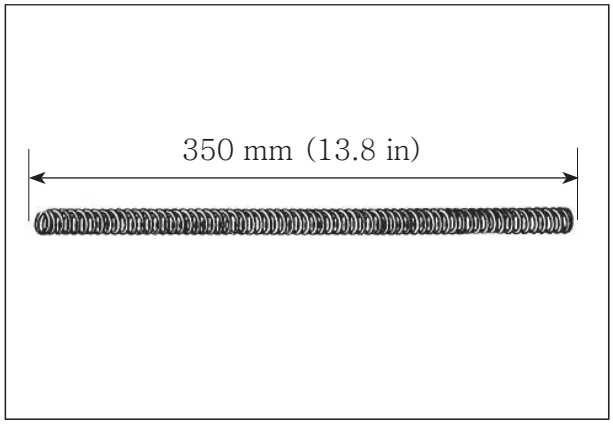

⊙ REASSEMBLY AND REMOUNTING

Reassemble and remount the front fork in the reverse order of removal and disassembly.
Pay attention to the following points :

⚠ CAUTION

- ❖ **Thoroughly wash all the component parts being assembled. Insufficient washing can result in oil leakage or premature wear of the parts.**
- ❖ **When reassembling the front fork, use new fork oil.**
- ❖ **Use the specified fork oil for the front fork.**
- ❖ **When reassembling, replace the oil seal and dust seal with new ones.**

- On the inner tube, assemble the following parts.
  ① Dust seal
  ② Oil seal stopper ring
  ③ Oil seal
  ④ Oil seal retainer
  ⑤ Outer tube slide metal
  ⑥ Inner tube slide metal

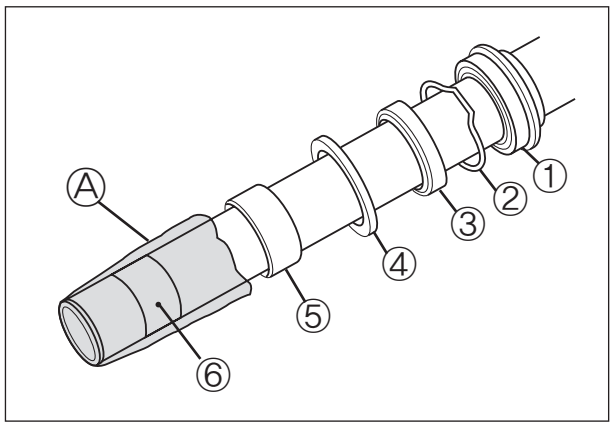

⚠ CAUTION

- ❖ **When installing the dust seal ① and oil seal ③ onto the inner tube, protect their seal lips with a vinyl film Ⓐ to prevent oil seal damage.**
- ❖ **Do not use solvents for washing to prevent oil seal damage.**

■ OUTER TUBE

- Install the outer tube to the inner tube.

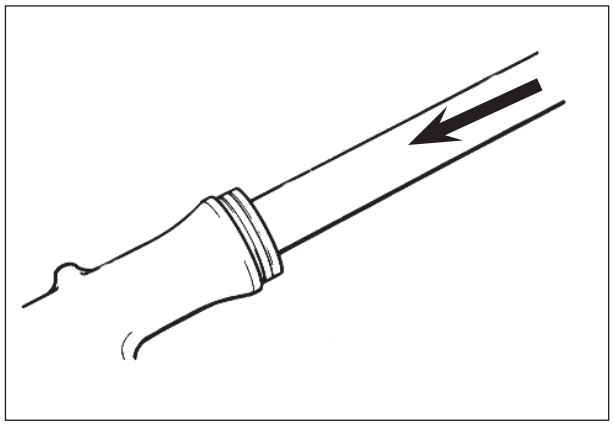

⚠ CAUTION

Be careful not to damage the dust seal lip and the oil seal lip, when installing the outer tube.

■ OIL SEAL AND DUST SEAL

- Apply GREASE to the new oil seal and dust seal lips lightly before installing it.

GREASE

- Install the oil seal retainer ④, oil seal ③, oil seal stopper ring ② and dust seal ① to the outer tube.

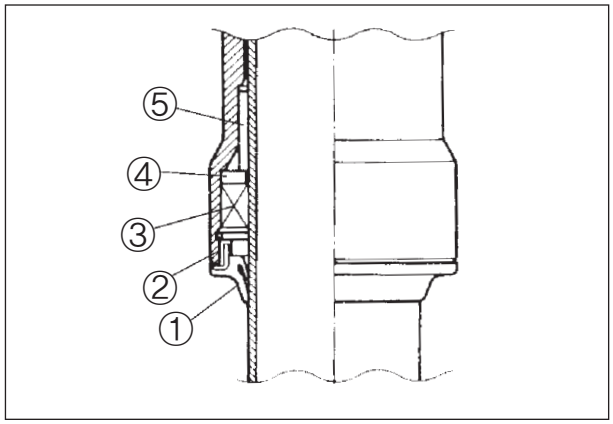

⚠ CAUTION

- ❖ **When installing the oil seal to outer tube, be careful not to damage the oil seal lip.**
- ❖ **Do not use solvents for washing to prevent oil seal damage.**
- ❖ **Apply fork oil to the outer tube slide metal ⑤.**
- ❖ **Make sure that the oil seal stopper ring ② has been fitted securely.**

■ FORK OIL

- Place the front fork vertically without spring.
- Compress it fully.
- Pour specified front fork oil up to the top level of the outer tube.
- Move the inner rod slowly more than ten times until bubbles do not come out from the oil.

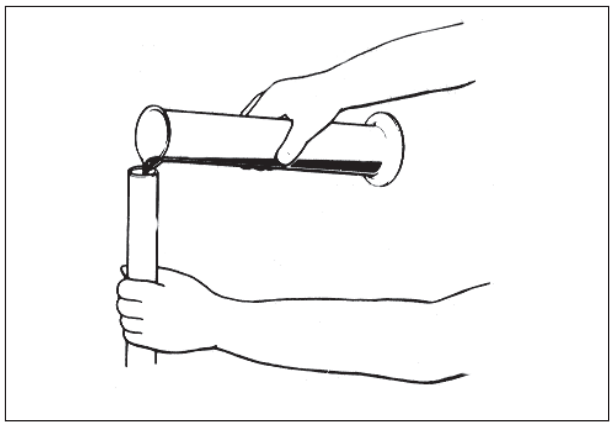

NOTE

Refill front fork oil up to the top of the outer tube to find bubbles while bleeding air.

- Refill specified front fork oil up to the top level of the outer tube again. Move the outer tube up and down several strokes until bubbles do not come out from the oil.
- Keep the front fork vertically and wait 5 ~ 6 minutes.

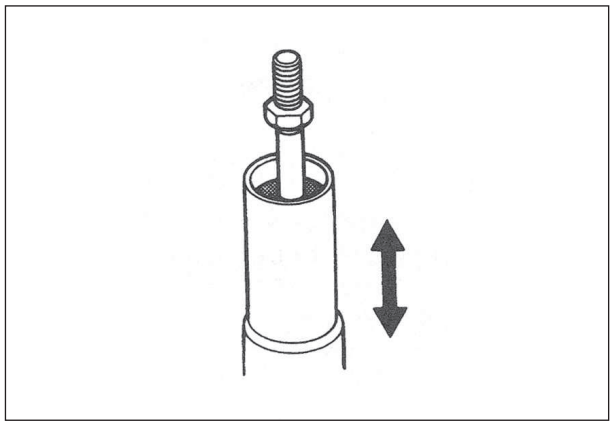

NOTE

❖ ***Always keep oil level over the tube top end, or air may enter the tube during this procedure.***

\# ***Take extreme attention to pump out air completely.***

- Hold the front fork vertically and adjust fork oil level with the special tool.

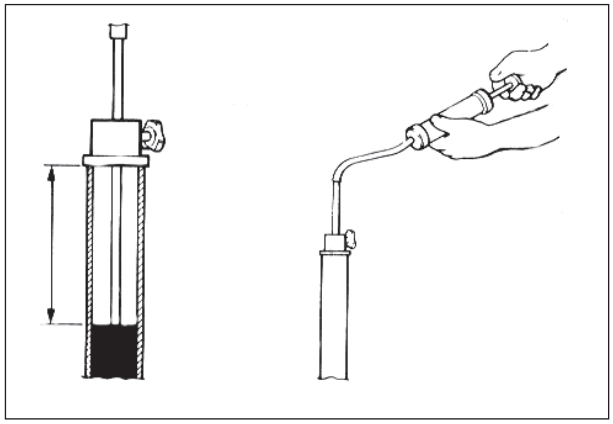

NOTE

When adjusting the fork oil level, remove the fork spring and compress the outer tube fully.

Front fork oil capacity	Each leg
	481 ± 2 cc

Front fork oil level	Standard
	100 mm (3.9 in) from end of outer tube (when maximum compressed without spring)

FORK **Front fork oil specification : TOP #15, SAE0W or an equivalent fork oil**

TOOL **Front fork oil level gauge : 09943-74111**

■ FRONT FORK CAP BOLT

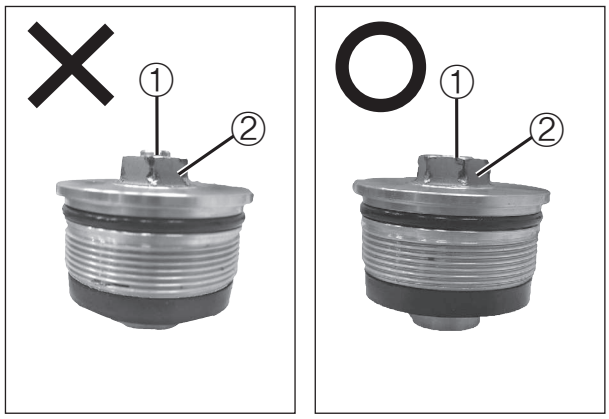

- When installing the spring adjuster ① to the front fork cap bolt ②, set the upper surface of the front fork cap bolt ② with the upper surface of the spring adjuster ① horizontally.

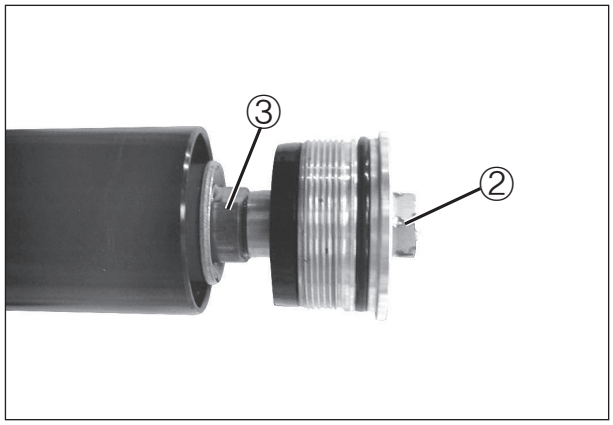

- Hold the front fork cap bolt ② and tighten the inner rod lock nut ③ to the specified torque.
  Inner rod lock nut
  : 17.5 ~ 22.5 N · m (1.75 ~ 2.25 kgf · m)
- Tighten the front fork cap bolt ② to the specified torque.
  Front fork cap bolt
  : 30 ~ 40 N · m (3.0 ~ 4.0 kgf · m)

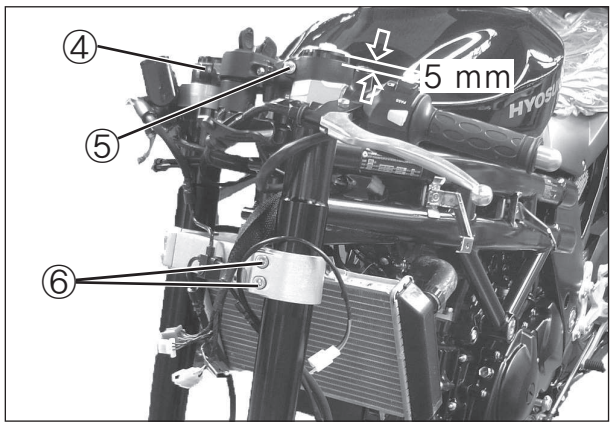

- When installing the front fork to the steering stem upper bracket ④, install the steering stem upper bracket ④ to the front fork cap bolt under 5 mm (0.2 in).

- Tighten the front fork upper ⑤ and lower ⑥ clamp bolts to the specified torque, right and left.
  Front fork upper clamp bolt
  : 22 ~ 35 N · m (2.2 ~ 3.5 kgf · m)
  Front fork lower clamp bolt
  : 22 ~ 35 N · m (2.2 ~ 3.5 kgf · m)

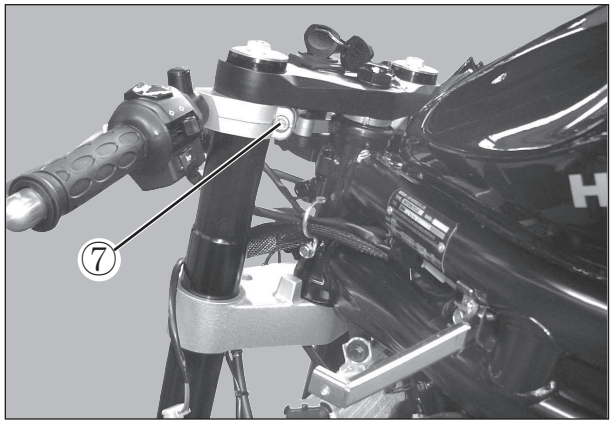

- Tighten the handlebar clamp bolts ⑦, right and left.
  Handlebar clamp bolt
  : 22 ~ 35 N · m (2.2 ~ 3.5 kgf · m)

- Install the right front fork in the same manner as the left one.
- Install the front fender and tighten its mounting bolts with finger.
- Install the front wheel.
- Install the brake calipers.
- Swing the motorcycle up and down several times.
- Tighten the front fender mounting bolts.
- Install the brake hose securely.
- Install the body cowling.

⊙ FRONT FORK SETTING

After installing the front fork, adjust the rebound and compression damping force as follows.

■ DAMPING FORCE ADJUSTMENT

1. Rebound damping force

To adjust the rebound damping force turn in the adjuster ① fully for "S" or "H" direction.

Count the number of clicks from the fully turned-in position.

Fully turned-in "H" direction provides stiffest rebound damping force and turning "S" direction the adjuster will soften rebound damping force.

	Standard
Front fork rebound damping force adjuster	12 clicks out from end of "H" direction

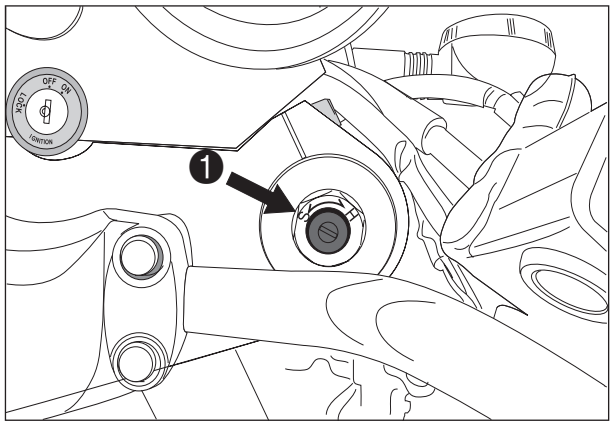

2. Compression damping force

To adjust the compression damping force turn in the adjuster ② fully for "S" or "H" direction.

Count the number of clicks from the fully turned-in position.

Fully turned-in "H" direction provides stiffest compression damping force and turning "S" direction the adjuster will soften compression damping force.

	Standard
Front fork compression damping force adjuster	10 clicks out from end of "H" direction

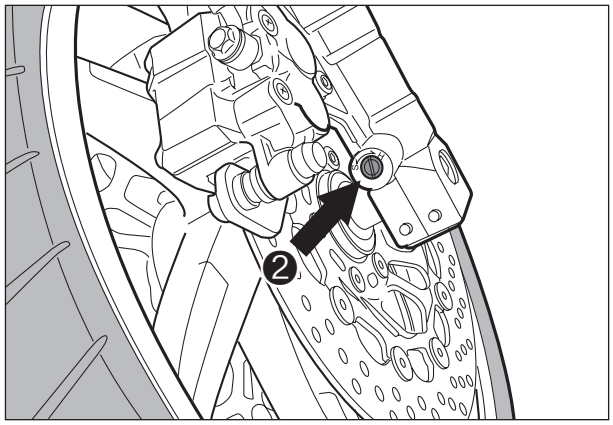

STANDARD FRONT FORK DAMPING FORCE			
		Rebound	**Compression**
Solo riding	**Softer**	Turn to "S" direction	Turn to "S" direction
	Standard	12 clicks out from end of "H" direction	10 clicks out from end of "H" direction
	Stiffer	Turn to "H" direction	Turn to "H" direction
Dual riding		12 clicks out from end of "H" direction	10 clicks out from end of "H" direction

⚠ WARNING

Be sure to adjust the rebound and compression damping force on both front fork legs equally.

MEMO

SERVICING INFORMATION

CONTENTS

TROUBLESHOOTING ····· 110 [8-1-1]

SPECIAL TOOLS ····· 121 [8-9]

TIGHTENING TORQUE ····· 122 [8-12]

SERVICE DATA ····· 123 [8-18-1]

WIRING DIAGRAM [GV650 PRO D spec] ····· 128 [8-30-1]

WIRING DIAGRAM [GT650R EJ D spec] ····· 130 [8-30-3]

WIRING DIAGRAM [GT650P EJ D spec] ····· 132 [8-30-5]

8

MALFUNCTION CODE AND DEFECTIVE CONDITION

MALFUNCTION CODE	DETECTED ITEM		DETECTED FAILURE CONDITION CHECK FOR
noEr	NO FAULT		—
0031	NO.1 O_2 S heater Circuit	Low Voltage	After engine running, if oxygen sensor heater signal open or is happened the ground short fault for 1 second by 10 times in 12 times test cycle, the code 0031 is indicated.
			Oxygen sensor, lead wire / coupler connection.
0032		High Voltage	After engine running, if oxygen sensor heater signal is happened the high short fault for 1 second by 10 times in 12 times test cycle, the code 0032 is indicated.
			Oxygen sensor, lead wire / coupler connection.
0037	NO.2 O_2 S heater Circuit	Low Voltage	After engine running, if oxygen sensor heater signal open or is happened the ground short fault for 1 second by 10 times in 12 times test cycle, the code 0037 is indicated.
			Oxygen sensor, lead wire / coupler connection.
0038		High Voltage	After engine running, if oxygen sensor heater signal is happened the high short fault for 1 second by 10 times in 12 times test cycle, the code 0038 is indicated.
			Oxygen sensor, lead wire / coupler connection.
0107	IAPS Circuit	Low Voltage or Open	The sensor should produce following voltage. 0.15 V $\leqq$ Sensor output voltage Without the above range for 2.2 sec. and more, 0107 is indicated.
			Intake air pressure sensor, lead wire / coupler connection.
0108		High Voltage	The sensor should produce following voltage. Sensor output voltage $\leqq$ 5 V Without the above range for 10.0 sec. and more, 0108 is indicated.
			Intake air pressure sensor, lead wire / coupler connection.
0112	IATS Circuit	Low Voltage	The sensor voltage should be the following. 0.1 V $\leqq$ Sensor output voltage Without the above range for 6.25 sec. and more, 0112 is indicated.
			Intake air temperature sensor, lead wire / coupler connection.
0113		High Voltage or Open	The sensor voltage should be the following. Sensor output voltage $\leqq$ 4.9 V Without the above range for 6.25 sec. and more, 0113 is indicated.
			Intake air temperature sensor, lead wire / coupler connection.

MALFUNCTION CODE	DETECTED ITEM		DETECTED FAILURE CONDITION CHECK FOR
0117	WTS Circuit	Low Voltage	The sensor voltage should be the following. 0.1 V ≦ Sensor output voltage Without the above range for 6.25 sec. and more, 0117 is indicated.
			Water temperature sensor, lead wire / coupler connection.
0118		High Voltage or Open	The sensor voltage should be the following. Sensor output voltage ≦ 5 V Without the above range for 6.25 sec. and more, 0118 is indicated.
			Water temperature sensor, lead wire / coupler connection.
0122	TPS Circuit	Low Voltage or Open	The sensor should produce following voltage. 0.2 V ≦ Sensor output voltage Without the above range for 7.8 sec. and more, 0122 is indicated.
			Throttle position sensor, lead wire / coupler connection.
0123		High Voltage	The sensor should produce following voltage. Sensor output voltage ≦ 4.9 V Without the above range for 7.8 sec. and more, 0123 is indicated.
			Throttle position sensor, lead wire / coupler connection.
0131	NO.1 O_2 S Circuit	Low Voltage	After engine running, the oxygen sensor signal is inputted in ECU since then 300 sec. In this case, the sensor voltage should be the following. 30 mV ≦ Sensor output voltage Without the above range for 28.1 sec. and more, 0131 is indicated.
			Oxygen sensor, lead wire / coupler connection.
0132		High Voltage	After engine running, the oxygen sensor signal is inputted in ECU since then 300 sec. In this case, the sensor voltage should be the following. Sensor output voltage ≦ 1.0 V Without the above range for 29.4 sec. and more, 0132 is indicated.
			Oxygen sensor, lead wire / coupler connection.
0137	NO.2 O_2 S Circuit	Low Voltage	After engine running, the oxygen sensor signal is inputted in ECU since then 300 sec. In this case, the sensor voltage should be the following. 30 mV ≦ Sensor output voltage Without the above range for 28.1 sec. and more, 0137 is indicated.
			Oxygen sensor, lead wire / coupler connection.
0138		High Voltage	After engine running, the oxygen sensor signal is inputted in ECU since then 300 sec. In this case, the sensor voltage should be the following. Sensor output voltage ≦ 1.0 V Without the above range for 29.4 sec. and more, 0138 is indicated.
			Oxygen sensor, lead wire / coupler connection.

MALFUNCTION CODE	DETECTED ITEM		DETECTED FAILURE CONDITION CHECK FOR
0201	NO.1 Fuel Injector Circuit Malfunction		After engine running, if NO.1 fuel injector signal open or is happened the high / ground short fault for 1 second by 5 times in 10 times test cycle, the code 0201 is indicated.
			Injector, wiring / coupler connection, power supply to the injector.
0202	NO.2 Fuel Injector Circuit Malfunction		After engine running, if NO.2 fuel injector signal open or is happened the high / ground short fault for 1second by 5 times in 10 times test cycle, the code 0202 is indicated.
			Injector, wiring / coupler connection, power supply to the injector.
0230	Fuel pump relay Circuit	Low Voltage or Open	After engine running, if fuel pump relay signal open or is happened the ground short fault for 1 second by 10 times in 20 times test cycle, the code 0230 is indicated.
			Fuel pump relay, connecting lead wire, power source to fuel pump relay, fuel injector.
0232		High Voltage	After engine running, if fuel pump relay signal is happened the high short fault for 1 second by 10 times in 20 times test cycle, the code 0232 is indicated.
			Fuel pump relay, connecting lead wire, power source to fuel pump relay, fuel injector.
0336	Pick-up coil	Noisy Signal	After engine running, if the magneto rotor tooth's error is happened continuously by 10 times in 100 times test cycle, the code 0336 is indicated.
			Pick-up coil wiring and mechanical parts. (Pick-up coil, lead wire coupler connection)
0337		No Signal	After engine running, if the pick-up coil signal does not reach ECU for more than 0.5 sec., the code 0337 is indicated.
			Pick-up coil wiring and mechanical parts. (Pick-up coil, lead wire coupler connection)
0351	NO.1 IG coil Malfunction		After engine running, if NO.1 ignition coil signal open or is happened the high / ground short fault for 1 second by 5 times in 10 times test cycle, the code 0351 is indicated.
			Ignition coil, wiring / coupler connection, power supply from the battery.
0352	NO.2 IG coil Malfunction		After engine running, if NO.2 ignition coil signal open or is happened the high / ground short fault for 1 second by 5 times in 10 times test cycle, the code 0352 is indicated.
			Ignition coil, wiring / coupler connection, power supply from the battery.

MALFUNCTION CODE	DETECTED ITEM		DETECTED FAILURE CONDITION CHECK FOR
0500	Speedo sensor Malfunction		Motorcycle speed ＜ 10 km/h Water temperature ＜ 20 ℃ IAPS pressure ＞ 40 kPa 20% ＜ TPS open angle ＜ 100% 2,000 rpm ＜ Engine speed ＜ 6,000 rpm If the above conditions are maintained for more than 1 second, the code 0500 is indicated.
			Speedo sensor, wiring / coupler connection to ECU.
0505	ISC Error		After engine running, if idle speed is different to 500 rpm from the specified range in 25 seconds test cycle, the code 0505 is indicated.
			Idle speed control solenoid, wiring / coupler connection.
0562	Battery Voltage	Low	The battery voltage should be the following. 9 V ≦ Battery voltage Without the above range for 3.125 sec. and more, 0562 is indicated.
			Battery, wiring / coupler connection to ECU.
0563		High	The battery voltage should be the following. Battery voltage ≦ 16 V Without the above range for 3.125 sec. and more, 0563 is indicated.
			Battery, wiring / coupler connection to ECU.
0650	“FI” check lamp Circuit Malfunction		After engine running, if “FI” check lamp signal open or is happened the high / ground short fault for 1 second by 40 times in 80 times test cycle, the code 0650 is indicated.
			“FI” check lamp, wiring / coupler connection.
0850	GP or Clutch lever Switch Circuit Malfunction		If gear position or clutch lever switch signal feedback is not active in continuous by 20 times in fully power down cycles, the code 0850 is indicated. (Fully power down cycle : Ignition switch “ON” → “OFF” position)
			Gear position or clutch lever switch, wiring / coupler connection, gearshift cam etc.

⊙ ENGINE

Complaint	Symptom and possible causes	Remedy
Engine will not start or is hard to start.	**Compression too low**	
	1. Tappet clearance out of adjustment.	Adjust.
	2. Worn valve guides or poor seating of valves.	Repair or replace.
	3. Mistimed valves.	Adjust.
	4. Excessively worn piston rings.	Replace.
	5. Worn-down cylinder bore.	Replace.
	6. Starter motor cranks too slowly.	See electrical section.
	7. Poor seating of spark plugs.	Retighten.
	Plug not sparking	
	1. Fouled spark plugs.	Clean.
	2. Wet spark plugs.	Clean and dry.
	3. Defective ignition coils.	Replace.
	4. Open or short in high-tension cord.	Replace.
	5. Defective pick-up coil.	Replace.
	6. Defective ECU.	Replace.
	7. Open-circuited wiring connections.	Repair or replace.
	No fuel reaching the intake manifold	
	1. Clogged fuel filter or fuel hose.	Clean or replace.
	2. Defective fuel pump.	Replace.
	3. Defective fuel pressure regulator.	Replace.
	4. Defective fuel injector.	Replace.
	5. Defective fuel pump relay.	Replace.
	6. Defective ECU.	Replace.
	7. Open-circuited wiring connections.	Check and repair.
	Incorrect fuel/air mixture	
	1. Defective fuel pump.	Replace.
	2. Defective fuel pressure regulator.	Replace.
	3. Defective TP sensor.	Replace.
	4. Defective pick-up coil.	Replace.
	5. Defective IAP sensor.	Replace.
	6. Defective ECU.	Replace.
	7. Defective WT sensor.	Replace.
	8. Defective IAT sensor.	Replace.

Complaint	Symptom and possible causes	Remedy
Engine idles poorly.	1. Tappet clearance out of adjustment.	Adjust.
	2. Poor seating of valves.	Replace or repair.
	3. Defective valve guides.	Replace.
	4. Worn down camshafts.	Replace.
	5. Too wide spark plug gaps.	Adjust or replace.
	6. Defective ignition coils.	Replace.
	7. Defective pick-up coil.	Replace.
	8. Defective ECU.	Replace.
	9. Defective TP sensor.	Replace.
	10. Defective fuel pump.	Replace.
	11. Imbalanced throttle valve.	Adjust.
	12. Damaged or cracked vacuum hose.	Replace.
Engine stalls often.	**Incorrect fuel / air mixture**	
	1. Defective IAP sensor or circuit.	Repair or replace.
	2. Clogged fuel filter.	Clean or replace.
	3. Defective fuel pump.	Replace.
	4. Defective fuel pressure regulator.	Replace.
	5. Defective WT sensor.	Replace.
	6. Defective thermostat.	Replace.
	7. Defective IAT sensor.	Replace.
	8. Damaged or cracked vacuum hose.	Replace.
	Fuel injector improperly operating	
	1. Defective fuel injectors.	Replace.
	2. No injection signal from ECU.	Repair or replace.
	3. Open or short circuited wiring connection.	Repair or replace.
	4. Defective battery or low battery voltage.	Replace or recharge.
	Control circuit or sensor improperly operating	
	1. Defective ECU.	Replace.
	2. Defective fuel pressure regulator.	Replace.
	3. Defective TP sensor.	Replace.
	4. Defective IAT sensor.	Replace.
	5. Defective pick-up coil.	Replace.
	6. Defective WT sensor.	Replace.
	7. Defective fuel pump relay.	Replace.
	Engine internal parts improperly operating	
	1. Fouled spark plugs.	Clean.
	2. Defective pick-up coil or ECU.	Replace.
	3. Clogged fuel hose.	Clean.
	4. Tappet clearance out of adjustment.	Adjust.

Complaint	Symptom and possible causes	Remedy
Noisy engine.	**Excessive valve chatter**	
	1. Too large tappet clearance.	Adjust.
	2. Weakened or broken valve springs.	Replace.
	3. Worn tappet or cam surface.	Replace.
	4. Worn and burnt camshaft journal.	Replace.
	Noise seems to come from piston	
	1. Worn down pistons or cylinders.	Replace.
	2. Combustion chambers fouled with carbon.	Clean.
	3. Worn piston pins or piston pin bore.	Replace.
	4. Worn piston rings or ring grooves.	Replace.
	Noise seems to come from cam chain	
	1. Stretched chain.	Replace.
	2. Worn sprockets.	Replace.
	3. Tension adjuster not working.	Repair or replace.
	Noise seems to come from clutch	
	1. Worn splines of countershaft or hub.	Replace.
	2. Worn teeth of clutch plates.	Replace.
	3. Distorted clutch plates, driven and drive.	Replace.
	4. Worn clutch release bearing.	Replace.
	5. Weakened clutch dampers.	Replace the primary driven gear.
	Noise seems to come from crankshaft	
	1. Rattling bearings due to wear.	Replace.
	2. Worn and burnt big-end bearings.	Replace.
	3. Worn and burnt journal bearings.	Replace.
	Noise seems to come from transmission	
	1. Worn or rubbing gears.	Replace.
	2. Worn splines.	Replace.
	3. Worn bearings.	Replace.
	4. Worn or rubbing primary gears.	Replace.
	Noise seems to come from water pump	
	1. Too much play on pump shaft bearing.	Replace.
	2. Worn or damaged impeller shaft.	Replace.
	3. Worn or damaged mechanical seal.	Replace.
	4. Contact between pump case and impeller.	Replace.

Complaint	Symptom and possible causes	Remedy
Engine runs poorly in high speed range.	**Defective engine internal / electrical parts**	
	1. Weakened valve springs.	Replace.
	2. Worn camshafts.	Replace.
	3. Valve timing out of adjustment.	Adjust.
	4. Too narrow spark plug gaps.	Adjust.
	5. Ignition not advanced sufficiently due to poorly working timing advance circuit.	Replace ECU.
	6. Defective ignition coils.	Replace.
	7. Defective pick-up coil.	Replace.
	8. Defective ECU.	Replace.
	9. Clogged fuel hose, resulting in inadequate fuel supply to injector.	Clean and prime.
	10. Defective fuel pump.	Replace.
	11. Defective TP sensor.	Replace.
	12. Clogged air cleaner element.	Clean.
	Defective air flow system	
	1. Clogged air cleaner element.	Clean or replace.
	2. Defective throttle valve.	Adjust or replace.
	3. Sucking air from throttle body joint.	Repair or replace.
	4. Defective ECU.	Replace.
	Defective control circuit or sensor	
	1. Low fuel pressure.	Repair or replace.
	2. Defective TP sensor.	Replace.
	3. Defective IAT sensor.	Replace.
	4. Defective pick-up coil.	Replace.
	5. Defective IAP sensor.	Replace.
	6. Defective ECU.	Replace.

Complaint	Symptom and possible causes	Remedy
Engine lacks power.	**Defective engine internal / electrical parts**	
	1. Loss of tappet clearance.	Adjust.
	2. Weakened valve springs.	Replace.
	3. Valve timing out of adjustment.	Adjust.
	4. Worn piston rings or cylinders.	Replace.
	5. Poor seating of valves.	Repair.
	6. Fouled spark plugs.	Clean or replace.
	7. Incorrect spark plugs.	Adjust or replace.
	8. Clogged injectors.	Clean.
	9. Defective TP sensor.	Replace.
	10. Clogged air cleaner element.	Clean.
	11. Sucking air from throttle valve or vacuum hose.	Retighten or replace.
	12. Too much engine oil.	Drain out excess oil.
	13. Defective fuel pump or ECU.	Replace.
	14. Defective pick-up coil and ignition coils.	Replace.
	Defective control circuit or sensor	
	1. Low fuel pressure.	Repair or replace.
	2. Defective TP sensor.	Replace.
	3. Defective IAT sensor.	Replace.
	4. Defective pick-up coil.	Replace.
	5. Defective IAP sensor.	Replace.
	6. Defective ECU.	Replace.
	7. Defective GP switch.	Replace.
Engine overheats.	**Defective engine internal parts**	
	1. Heavy carbon deposit on piston crowns.	Clean.
	2. Not enough oil in the engine.	Add oil.
	3. Defective oil pump or clogged oil circuit.	Replace or clean.
	4. Sucking air from intake pipes.	Retighten or replace.
	5. Use incorrect engine oil.	Change.
	6. Defective cooling system.	See radiator section.
	Lean fuel / air mixture	
	1. Short-circuited IAP sensor / lead wire.	Repair or replace.
	2. Short-circuited IAT sensor / lead wire.	Repair or replace.
	3. Sucking air from intake pipe joint.	Repair or replace.
	4. Defective fuel injectors.	Replace.
	5. Defective WT sensor.	Replace.
	6. Defective cooling system.	Consult radiator section.
	The other factors	
	1. Ignition timing too advanced due to defective timing advance system (WT sensor, pick-up coil, GP switch and ECU).	Replace.
	2. Drive belt / chain is too tight.	Adjust.

Complaint	Symptom and possible causes	Remedy
Dirty or heavy exhaust smoke.	1. Too much engine oil in the engine. 2. Worn piston rings or cylinders. 3. Worn valve guides. 4. Cylinder wall scored or scuffed. 5. Worn valves stems. 6. Defective stem seals. 7. Worn side rails.	Check with inspection window, drain out excess oil. Replace. Replace. Replace. Replace. Replace. Replace.
Slipping clutch.	1. Weakened clutch springs. 2. Worn or distorted pressure plates. 3. Distorted clutch plates or pressure plates.	Replace. Replace. Replace.
Dragging clutch.	1. Some clutch springs weakened while others are not. 2. Distorted pressure plates or clutch plates.	Replace. Replace.
Transmission will not shift.	1. Broken gearshift cam. 2. Distorted gearshift forks. 3. Worn gearshift pawl.	Replace. Replace. Replace.
Transmission will not shift back.	1. Broken return spring on shift shaft. 2. Rubbing or sticky shift shaft. 3. Distorted or worn gearshift forks.	Replace. Repair or replace Replace.
Transmission jumps out of gear.	1. Worn shifting gears on driveshaft or countershaft. 2. Distorted or worn gearshift forks. 3. Weakened stopper spring on gearshift stopper.	Replace. Replace. Replace.

⊙ ELECTRICAL

Complaint	Symptom and possible causes	Remedy
No sparking or poor sparking.	1. Defective ignition coils or spark plug caps. 2. Defective spark plugs. 3. Defective pick-up coil. 4. Defective ECU. 5. Defective RO switch. 6. Open-circuited wiring connections.	Replace. Replace. Replace. Replace. Replace. Check and repair.
Spark plug soon become fouled with carbon.	1. Mixture too rich. 2. Idling speed set too high. 3. Incorrect gasoline. 4. Dirty element in air cleaner. 5. Spark plugs too cold.	Inspect EI system. Inspect EI system. Change. Clean or replace. Replace by hot type plug.
Spark plug become fouled too soon.	1. Worn piston rings. 2. Pistons or cylinders worn. 3. Excessive clearance of valve stems in valve guides. 4. Worn stem oil seal.	Replace. Replace. Replace. Replace.
Spark plug electrodes overheat or burn.	1. Spark plugs too hot. 2. The engine overheats. 3. Spark plugs loose. 4. Mixture too lean.	Replace by cold type plug. Tune up. Retighten. Inspect EI system.
Magneto charge, but charging rate is below the specification.	1. Lead wires tend to get shorted or open-circuited or loosely connected at terminals. 2. Grounded or open-circuited stator coils of magneto. 3. Defective regulator / rectifier. 4. Defective cell plates in the battery.	Repair or retighten. Replace. Replace. Replace the battery.
Magneto overcharges.	1. Internal short - circuit in the battery. 2. Resistor element in the regulator / rectifier damaged or defective. 3. Regulator / rectifier poorly grounded.	Replace the battery. Replace. Clean and tighten ground connection.
Magneto does not charge.	1. Open - or short - circuited lead wirse, or loose lead connections. 2. Short - circuited, grounded or open stator coil. 3. Short - circuited or punctured regulator / rectifier.	Repair or replace or retighten. Replace. Replace.
Unstable charging.	1. Lead wire insulation frayed due to vibration resulting in intermittent shorting. 2. Magneto internally shorted. 3. Defective regulator / rectifier.	Repair or replace Replace. Replace.
Starter switch is not effective.	1. Battery run down. 2. Defective switch contacts. 3. Brushes not seating properly on commutator in starter motor. 4. Defective starter relay / ignition interlock switch. 5. Defective main fuse.	Recharge or replace. Replace. Repair or replace. Replace. Replace.

SPECIAL TOOLS

Special tools	Part Number · Part Name · Description
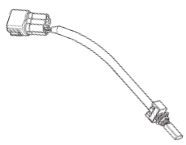	09900-27000 Mode select switch
	Inspect EI system sensor.
	09915-54510 Fuel pump pressure gauge
	Measure fuel pressure of fuel pump.

TIGHTENING TORQUE

⊙ EI SYSTEM PARTS

ITEM	N · m	kgf · m
Water temperature sensor (WT sensor)	5 ~ 8	0.5 ~ 0.8
Fuel injector	5 ~ 8	0.5 ~ 0.8
Intake air temperature sensor (IAT sensor)	5 ~ 8	0.5 ~ 0.8

SERVICE DATA

⊙ EI SENSORS

ITEM	SPECIFICATION		NOTE
IAP sensor input voltage	4.5 ~ 5.5 V		
IAP sensor output voltage	Approx. 2.7 V at idle speed		
TP sensor input voltage	4.9 ~ 5.1 V		
TP sensor output voltage	Closed	Approx. 1.07 ~ 1.17 V	
	Opened	Approx. 4.30 ~ 4.70 V	
IAT sensor resistance	0.081 ~ 48.352 KΩ [When Intake air temperature is –40℃ ~ 130℃ (–40℉ ~ 266℉)]		
IAT sensor resistance (each temperature)	Refer to page 57 [4-1-40]		

⊙ THROTTLE BODY

ITEM	SPECIFICATION	NOTE
Bore size	⌀ 39	
Idle rpm	1,400 ~ 1,600 rpm	
Throttle cable play	0.5 ~ 1.0 mm (0.02 ~ 0.04 in)	

⊙ FUEL INJECTOR + FUEL PUMP

ITEM	SPECIFICATION	NOTE
Fuel injector resistance	11.4 ~ 12.6 Ω at 20 ℃ (68 ℉)	
Fuel injector voltage	Battery voltage	
Fuel pressure of fuel pump	Approx. 2.25 ~ 2.50 kgf/cm² (220 ~ 245 kPa, 32.0 ~ 35.6 psi)	

⊙ THERMOSTAT + COOLING FAN + COOLANT

ITEM	STANDARD		LIMIT
Thermostat valve operating temperature	Valve opening	88℃ (190˚F)	
	Valve full open	100℃ (212˚F)	
	Valve closing	83℃ (181˚F)	
Thermostat valve lift	Over 8 mm (0.32 in) / 100℃ (212˚F)		
WT sensor resistance	0.1163 ~ 48.1400 KΩ [When Water temperature is –40℃ ~ 120℃ (–40˚F ~ 248˚F)]		
WT sensor resistance [To ECU] (each temperature)	–40℃ (–40˚F)	Approx. 48.140 KΩ	
	0℃ (32˚F)	Approx. 5.790 KΩ	
	20℃ (68˚F)	Approx. 2.450 KΩ	
	40℃ (104˚F)	Approx. 1.148 KΩ	
	60℃ (140˚F)	Approx. 0.586 KΩ	
	80℃ (176˚F)	Approx. 0.322 KΩ	
	120℃ (248˚F)	Approx. 0.1163 KΩ	
Cooling fan thermo-switch operating temperature	OFF → ON	Approx. 95℃ (203 ˚F)	
	ON → OFF	Approx. 88℃ (190 ˚F)	
Engine coolant type	Use an antifreeze/coolant compatible with aluminum radiator, mixed with distilled water only, at the ratio of 50 : 50		
Engine coolant capacity	Reserve tank side	230 ㎖	
	Radiator side	430 ㎖	
	Engine side	940 ㎖	

⊙ ELECTRICAL

Unit : mm (in)

ITEM	STANDARD		NOTE
Ignition timing	BTDC 5 ˚ / 2,000 rpm & BTDC 35 ˚ / 7,000rpm		
Spark plug	Type	CR8E	
	Gap	0.7 ~ 0.8 (0.028 ~ 0.032)	
	Hot type	CR7E	
	Standard type	CR8E	
	Cold type	CR9E	
Spark performance	Over 8 mm (0.32 in)		
Ignition coil primary peak voltage	400 V and more		
Ignition coil / Spark plug cap resistance	Primary	0.52 ~ 0.64 Ω	
	Secondary	6.4 ~ 7.8 KΩ	
Stator coil resistance	Pick-up coil	110 ~ 140 Ω	G-L
	Charging coil	0.2 ~ 0.4 Ω	Y-Y
Magneto no-load voltage	Over 70 V / 5,000 rpm		
Battery standard charging voltage	13.5 ~ 15.0 V / 5,000 rpm		
Battery	Type	STX14-BS	
	Capacity	12V 12Ah	
	Standard electrolyte S.G.	1.320 at 20℃ (68℉)	
Fuse size	Main	30 A	
	ECU	15 A	

⊙ SUSPENSION [GT650R EJ D spec 2013 model]

Unit : mm (in)

ITEM	STANDARD	LIMIT
Front fork stroke	120 (4.72)	———
Front fork spring free length	335 (14.0)	350 (13.8)
Front fork oil type	TOP #15, SAE0W or an equivalent fork oil	———
Front fork oil level	100 mm (3.9 in) from end of outer tube (when maximum compressed without spring)	———
Front fork oil capacity (each leg)	481 ± 2 cc	———

STANDARD FRONT FORK DAMPING FORCE			
		Rebound	Compression
Solo riding	Softer	Turn to "S" direction	Turn to "S" direction
	Standard	12 clicks out from end of "H" direction	10 clicks out from end of "H" direction
	Stiffer	Turn to "H" direction	Turn to "H" direction
Dual riding		12 clicks out from end of "H" direction	10 clicks out from end of "H" direction

WIRING DIAGRAM [GV650 PRO D spec]

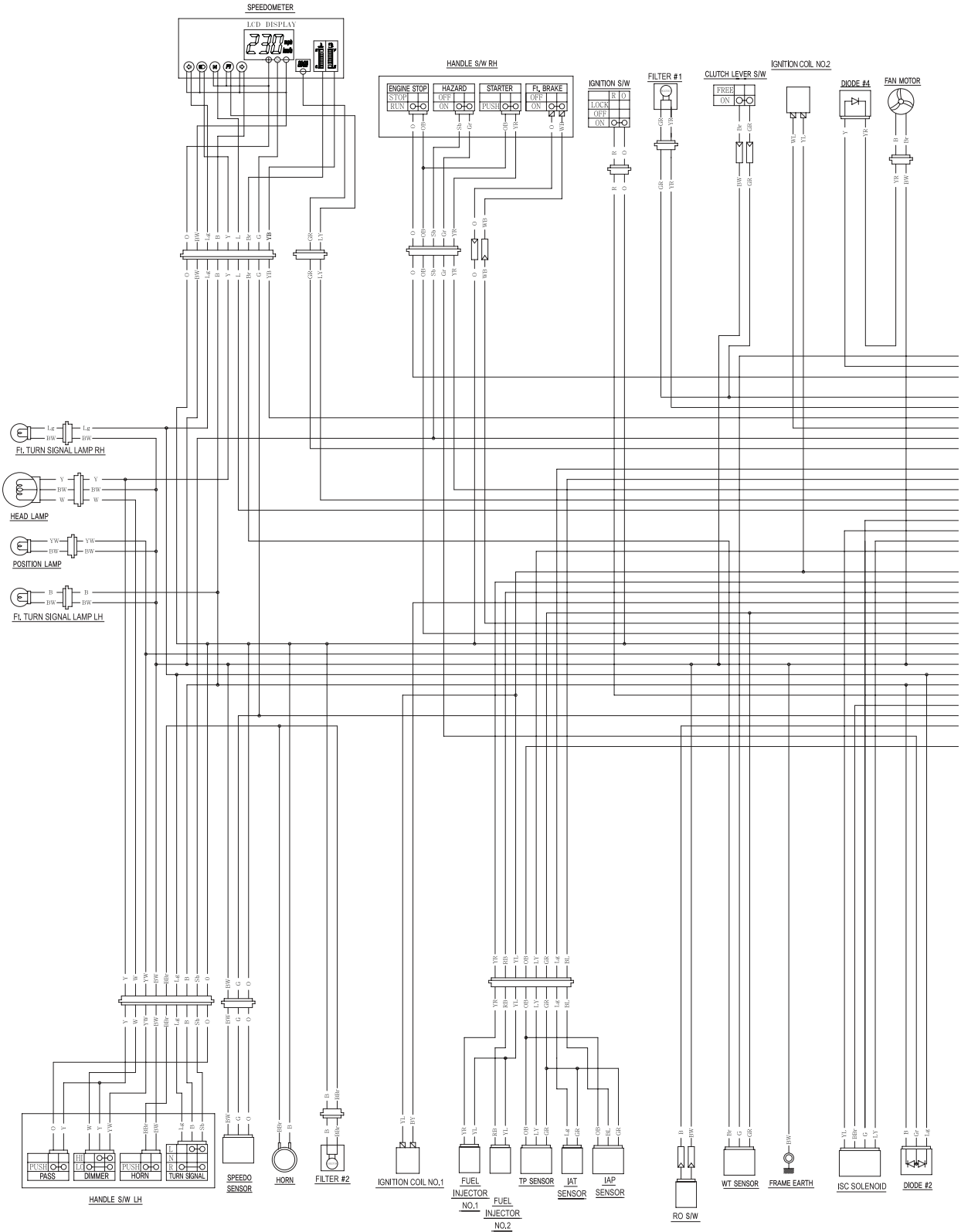

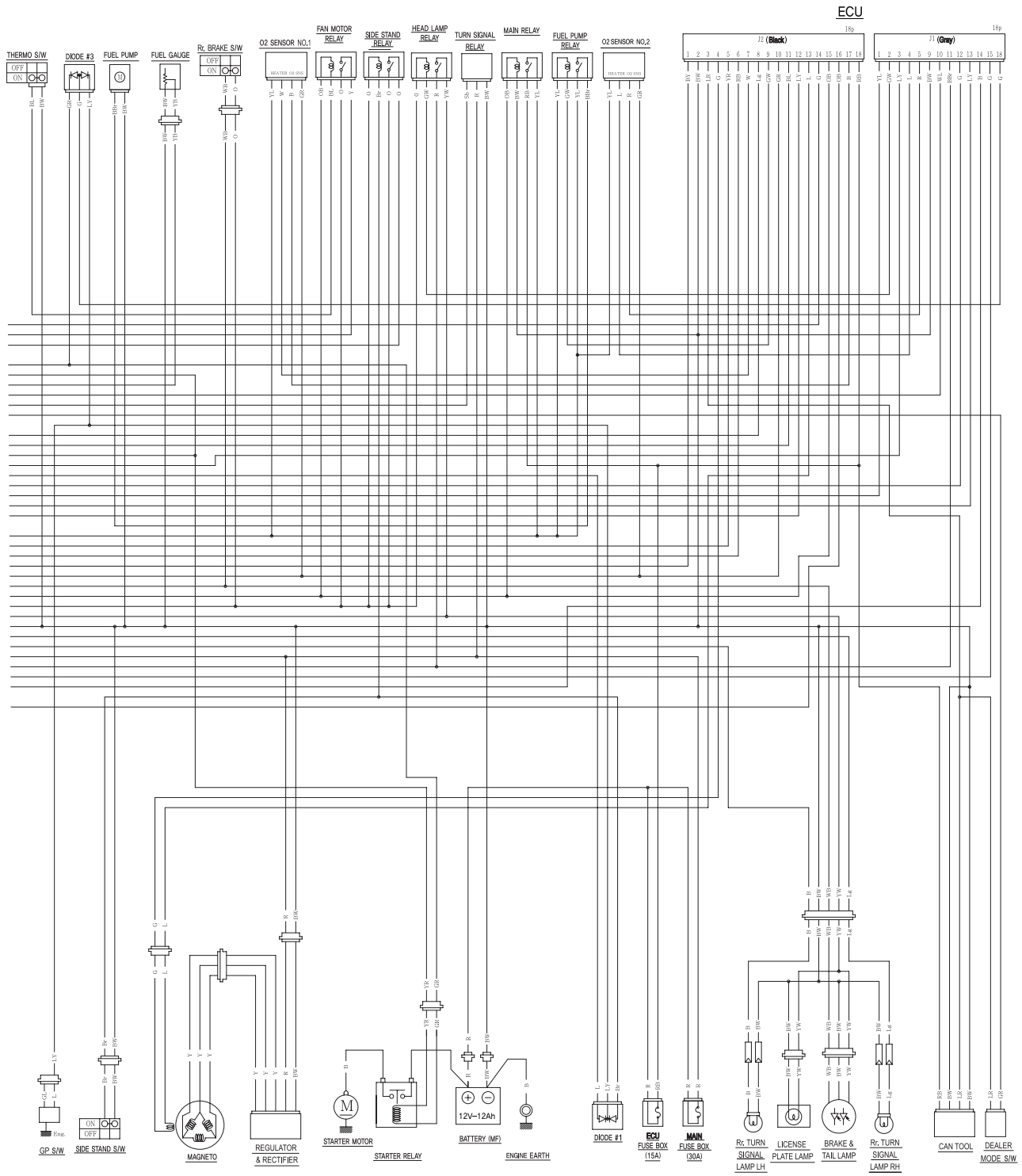
ECU
THERMO S/W
DIODE #3
FUEL PUMP
FUEL GAUGE
Rr. BRAKE S/W
O2 SENSOR NO.1
FAN MOTOR RELAY
SIDE STAND RELAY
HEAD LAMP RELAY
TURN SIGNAL RELAY
MAIN RELAY
FUEL PUMP RELAY
O2 SENSOR NO.2
J2 (Black)
J1 (Gray)
GP S/W
SIDE STAND S/W
MAGNETO
REGULATOR & RECTIFIER
STARTER MOTOR
STARTER RELAY
12V–12Ah
BATTERY (MF)
ENGINE EARTH
DIODE #1
ECU FUSE BOX (15A)
MAIN FUSE BOX (30A)
Rr. TURN SIGNAL LAMP LH
LICENSE PLATE LAMP
BRAKE & TAIL LAMP
Rr. TURN SIGNAL LAMP RH
CAN TOOL
DEALER MODE S/W

WIRING DIAGRAM [GT650R Ei D spec]

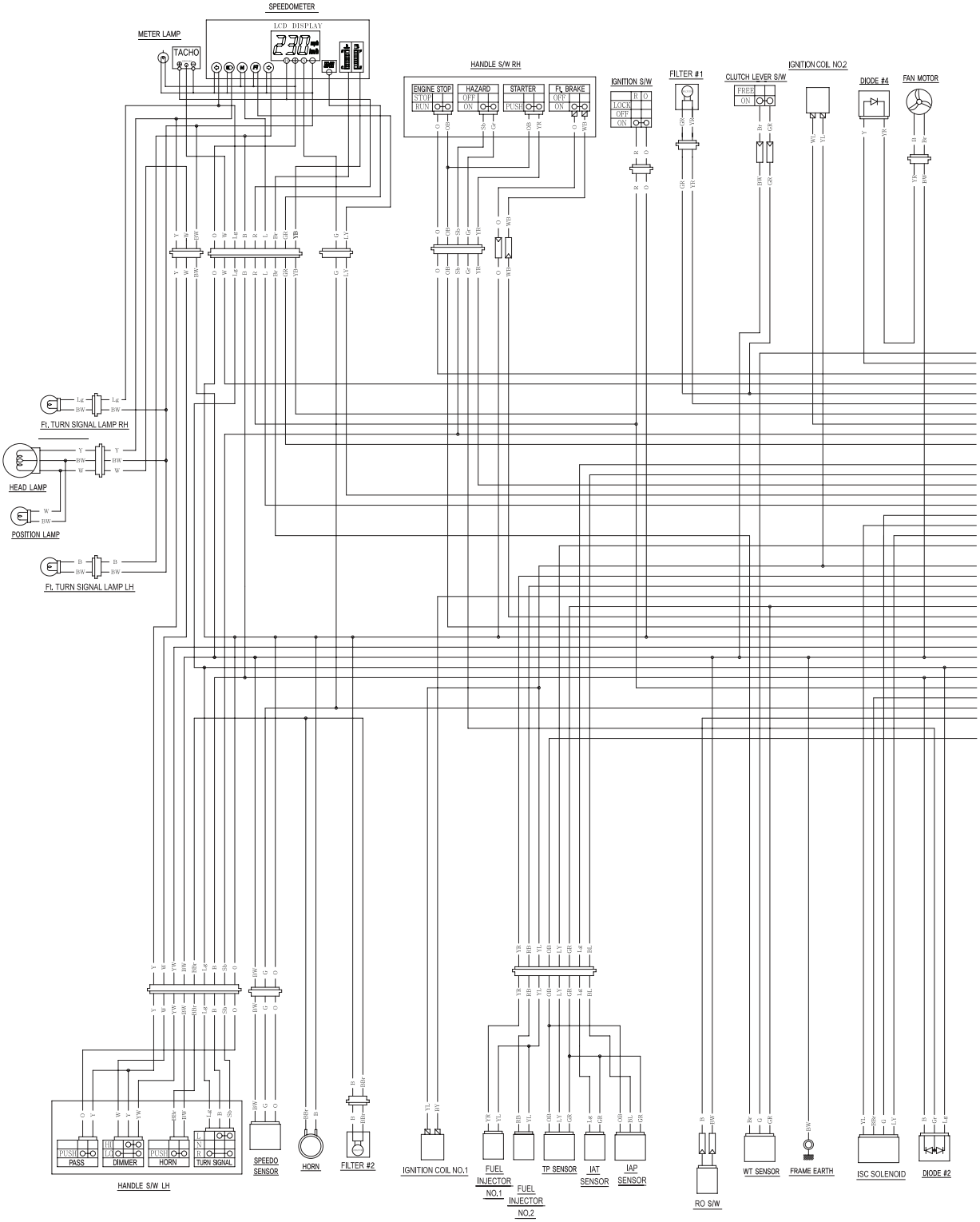

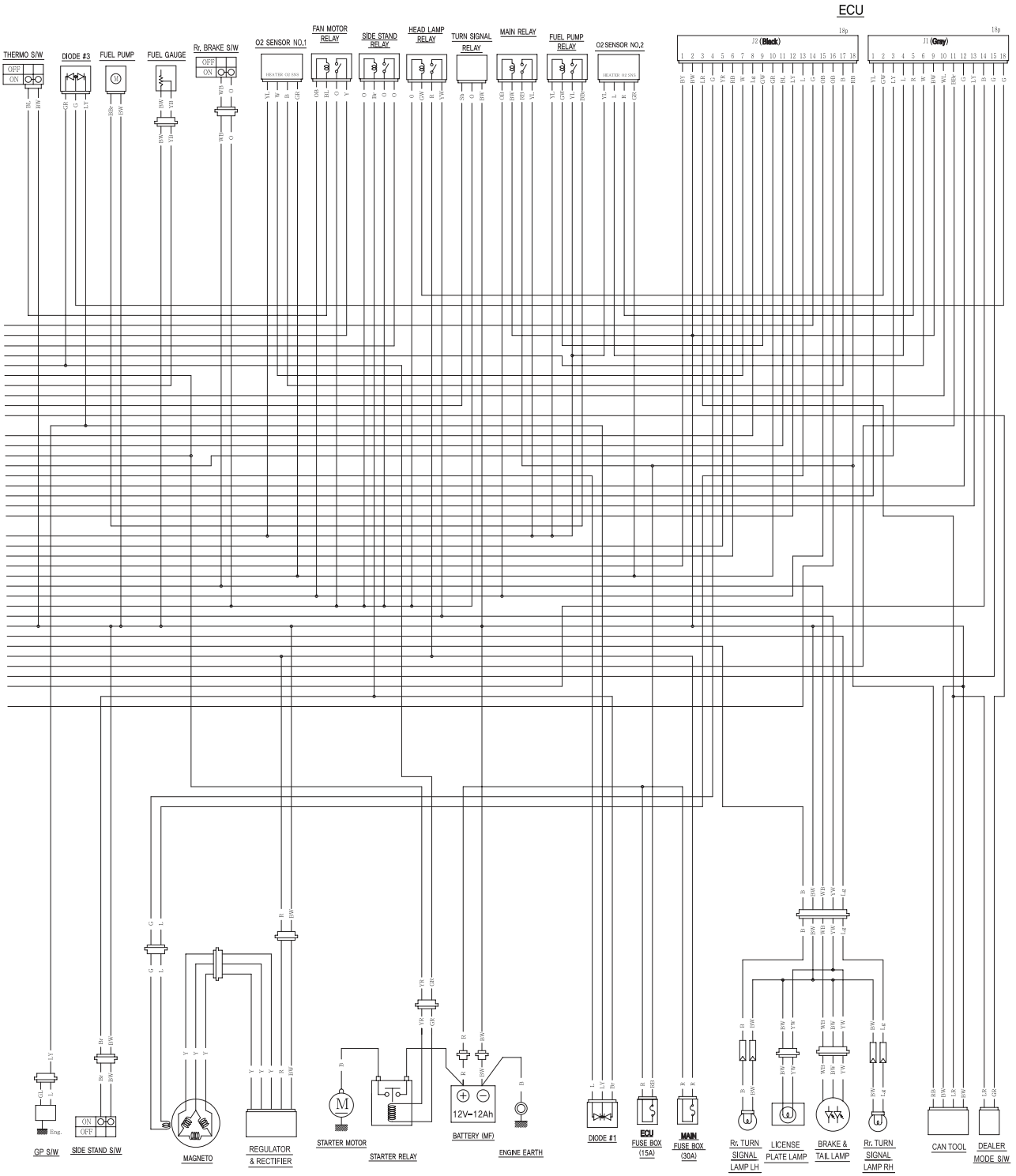
ECU
18p
J2 (Black)
18p
J1 (Gray)
THERMO S/W
DIODE #3
FUEL PUMP
FUEL GAUGE
Rr. BRAKE S/W
O2 SENSOR NO.1
FAN MOTOR RELAY
SIDE STAND RELAY
HEAD LAMP RELAY
TURN SIGNAL RELAY
MAIN RELAY
FUEL PUMP RELAY
O2 SENSOR NO.2
OFF
ON
HEATER O2 SNS
12V–12Ah
GP S/W
SIDE STAND S/W
MAGNETO
REGULATOR & RECTIFIER
STARTER MOTOR
STARTER RELAY
BATTERY (MF)
ENGINE EARTH
DIODE #1
ECU FUSE BOX (15A)
MAIN FUSE BOX (30A)
Rr. TURN SIGNAL LAMP LH
LICENSE PLATE LAMP
BRAKE & TAIL LAMP
Rr. TURN SIGNAL LAMP RH
CAN TOOL
DEALER MODE S/W

WIRING DIAGRAM [GT650 PEi D spec]

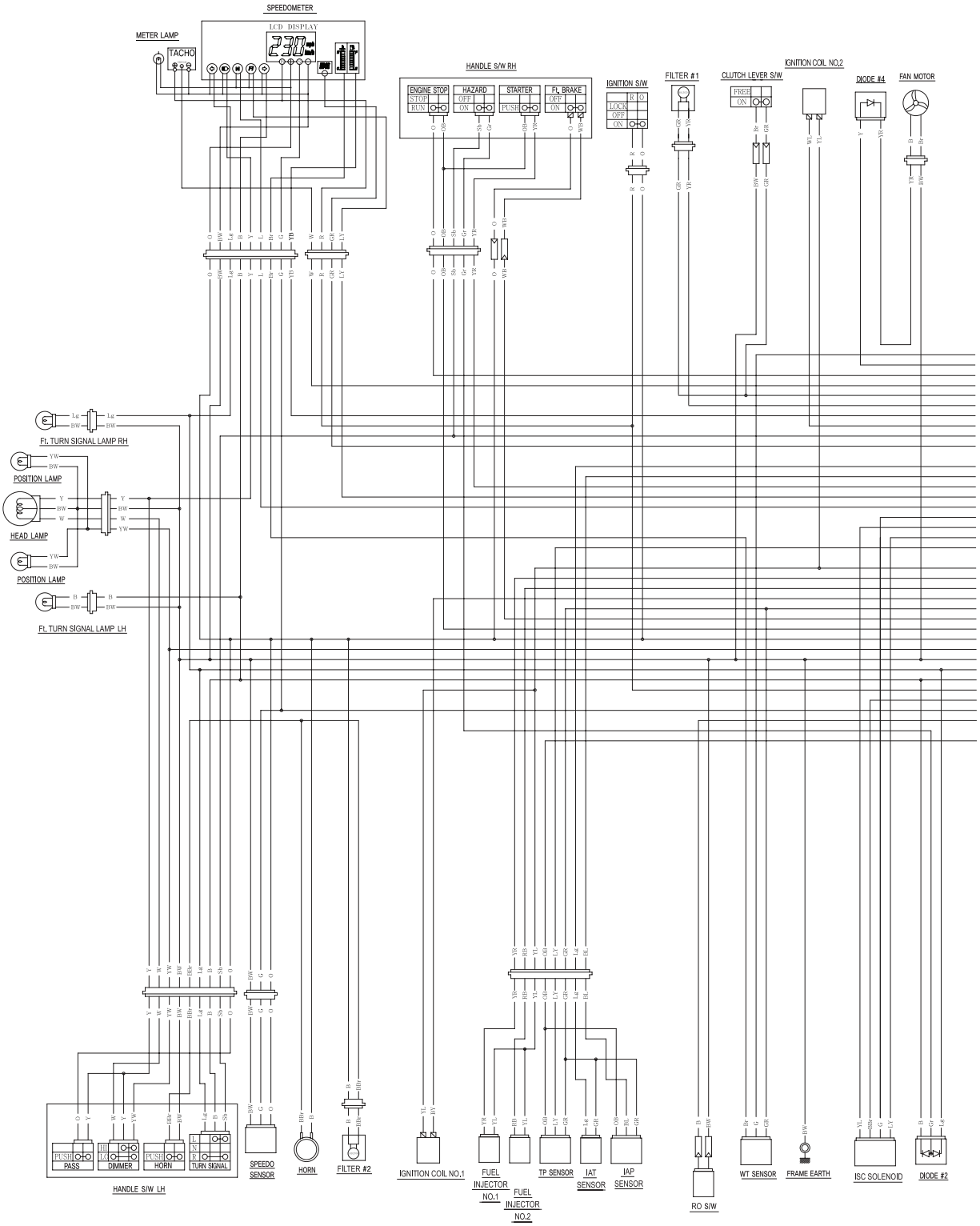

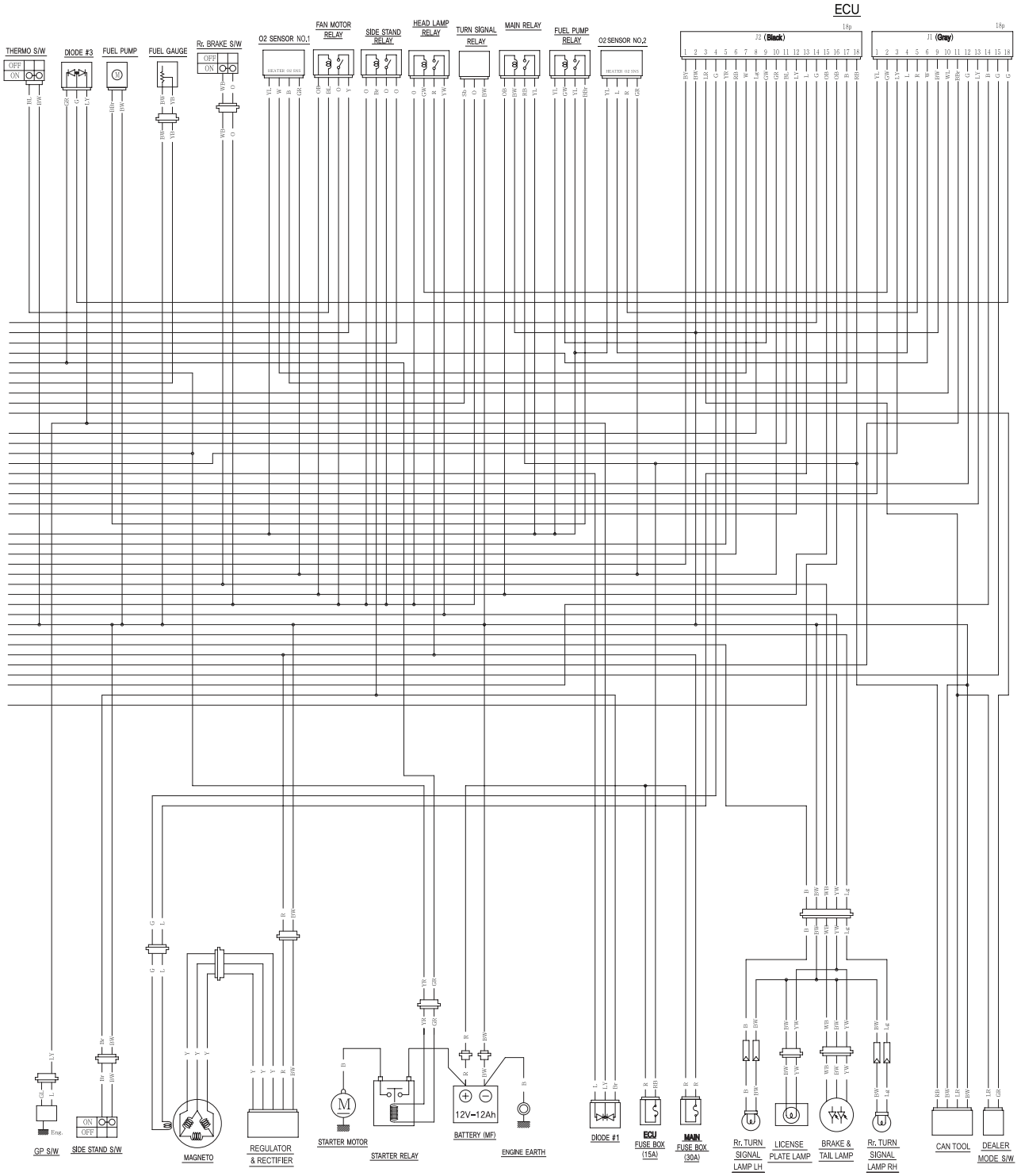
ECU
J2 (Black)
J1 (Gray)
THERMO S/W
DIODE #3
FUEL PUMP
FUEL GAUGE
Rr. BRAKE S/W
O2 SENSOR NO.1
FAN MOTOR RELAY
SIDE STAND RELAY
HEAD LAMP RELAY
TURN SIGNAL RELAY
MAIN RELAY
FUEL PUMP RELAY
O2 SENSOR NO.2
GP S/W
SIDE STAND S/W
MAGNETO
REGULATOR & RECTIFIER
STARTER MOTOR
STARTER RELAY
12V-12Ah
BATTERY (MF)
ENGINE EARTH
DIODE #1
ECU FUSE BOX (15A)
MAIN FUSE BOX (30A)
Rr. TURN SIGNAL LAMP LH
LICENSE PLATE LAMP
BRAKE & TAIL LAMP
Rr. TURN SIGNAL LAMP RH
CAN TOOL
DEALER MODE S/W

Prepared by

HYOSUNG
S&T Motors Co., Ltd.

1st Ed. OCT. 2012.

Manual NO. 99000HB9510
Printed in Korea

S&T Motors Co., Ltd.